WAR MEMORIAL FIELD IMPROVEMENTS PHASE IIA, SPRING FACILITIES

PROJECT MANUAL
VOLUME II OF II

CONTRACT DRAWINGS

SEPTEMBER 2020

PART 8

CONTRACT DRAWINGS

CITY OF SANDPOINT - SANDPOINT, IDAHO

WAR MEMORIAL FIELD IMPROVEMENTS PHASE IIA

801 ONTARIO STREET
SANDPOINT, IDAHO 83864

CONSTRUCTION DRAWINGS 100% BID SET

09-29-2020

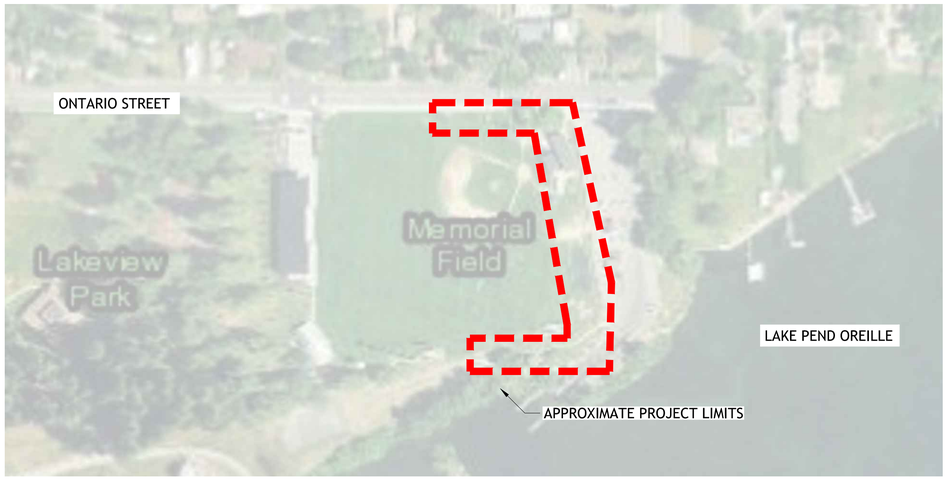

PROJECT LOCATION - SANDPOINT,IDAHO

NORTH

VICINITY MAPS (NTS):

SHEET INDEX

GENERAL:

G0.0 COVER SHEET & SHEET INDEX

CIVIL:

C1.1 SITE PLAN
C1.2 GRADING PLAN
C1.3 GRADING PLAN
C1.4 GRADING PLAN
C2.1 CIVIL DETAILS
C2.2 CIVIL DETAILS
C3.1 EROSION CONTROL PLAN
C3.2 EROSION CONTROL DETAILS

LANDSCAPE:

L1.0 MATERIALS PLAN (OVERALL)
L1.1 MATERIALS PLAN (NORTH)
L1.2 MATERIALS PLAN (SOUTH)
L2.0 LAYOUT PLAN (OVERALL)
L2.1 LAYOUT PLAN (NORTH)
L2.2 LAYOUT PLAN (SOUTH)
L6.0 LANDSCAPE SITE DETAILS
L6.1 LANDSCAPE SITE DETAILS
L6.2 LANDSCAPE SITE DETAILS
L6.3 LANDSCAPE SITE DETAILS

STRUCTURAL:

S0.1 GENERAL NOTES/DETAILS

PROJECT CONTACTS

CITY OF SANDPOINT
CITY ENGINEER/PROJECT MANAGER
DAN TADIC: PE, (208) 263-3577

BERNARDO WILLS ARCHITECTS
ARCHITECT/LANDSCAPE ARCHITECT (PRIME CONSULTANT)
DELL HATCH: PLA/PRINCIPAL,
JAMES DAVIS: PLA/PROJECT LANDSCAPE ARCHITECT

WELCH COMER ENGINEERS
SURVEYOR/CIVIL ENGINEER (SUB CONSULTANT)
PHIL BOYD: PE/PRINCIPAL
NATHAN WRIGHT: PROJECT ENGINEER

COFFMAN ENGINEERS
ELECTRICAL ENGINEER (SUB CONSULTANT)
ZACHARY YARBROUGH: PE

ECLIPSE ENGINEERING
STRUCTURAL ENGINEER (SUB CONSULTANT)
BRIAN HANSON: PE/PRINCIPAL

COPYRIGHT BERNARDO WILLS ARCHITECTS,PC 2013

STATE OF IDAHO
DELL R HATCH
LICENSED LANDSCAPE ARCHITECT
LA-150
09-29-20

100% BID SET
CONSTRUCTION SET
Cover Sheet &
Sheet Index

153 SOUTH JEFFERSON SPOKANE WASHINGTON 99201 509.838.4511 FAX 509.838.4605 WWW.BERNARDOWILLS.COM

War Memorial Field
Improvements - Phase 2A
Spring Facilities
801 Ontario Street
Sandpoint, Idaho 83864

BWA BERNARDO | WILLS ARCHITECTS PC

Project No: 19-10-207
Drawn by:
Date: 09-29-20

G0.0

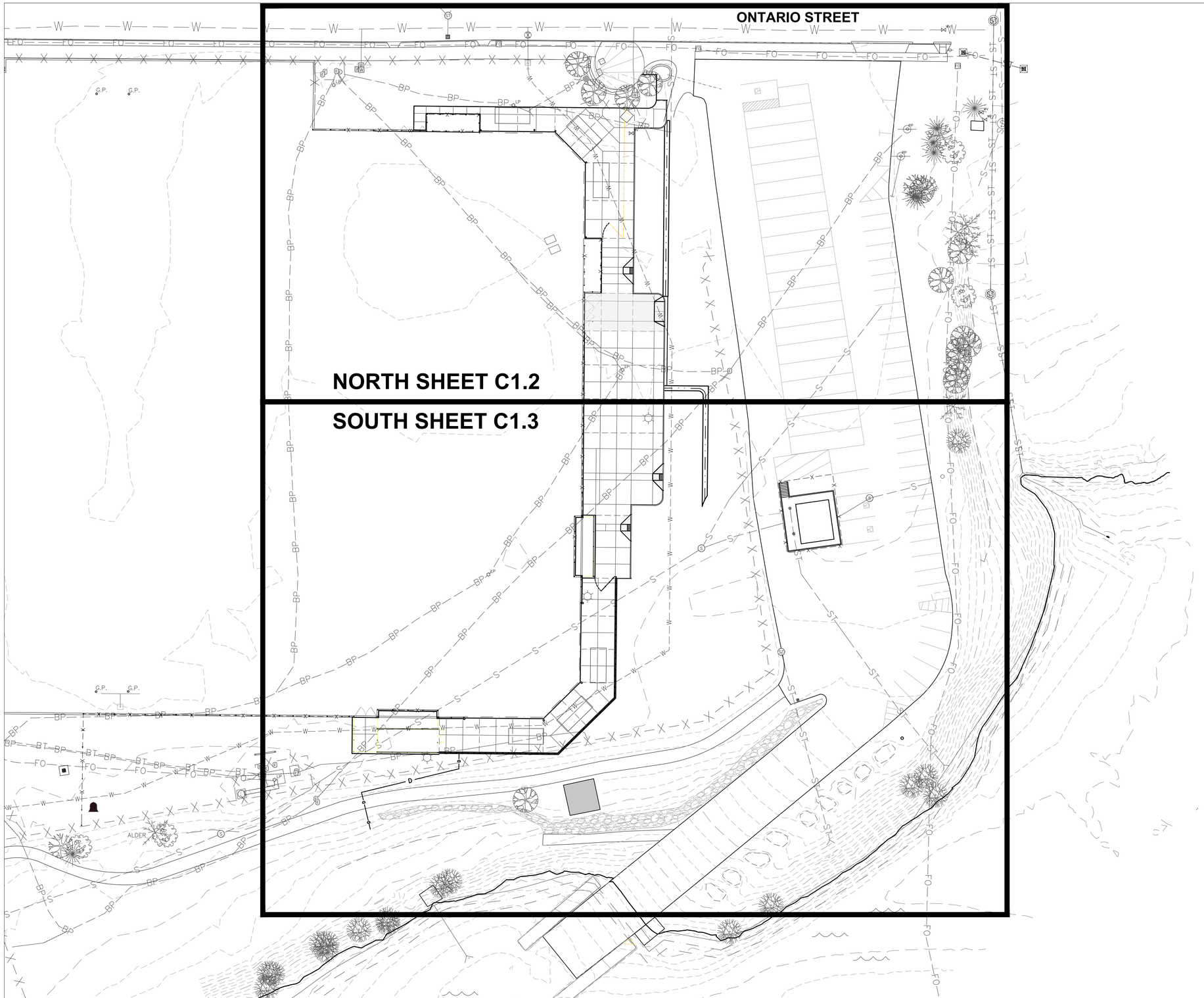

UNDERGROUND SERVICE ALERT
ONE-CALL NUMBER
811
CALL TWO BUSINESS DAYS BEFORE YOU DIG

PROFESSIONAL ENGINEER LICENSED 7898 STATE OF IDAHO PHILIP T. BOYD
09/29/20

COPYRIGHT BERNARDO WILLS ARCHITECTS.PC 2013

WELCH-COMER ENGINEERS | SURVEYORS
www.welchcomer.com
2307 W Lakes Ave, Suite 101
Coeur d'Alene, ID 83814
208-664-5922
(toll free) 877-664-5922
(fax) 208-664-5946

153 SOUTH JEFFERSON SPOKANE WASHINGTON 99201
509.838.4511 FAX 509.838.4605 WWW.BERNARDOWILLS.COM

100% BID SET
CONSTRUCTION SET

SITE PLAN

War Memorial Field
Improvements - Phase 2A
Spring Facilities
801 Ontario Street
Sandpoint, Idaho 83864

BERNARDO | WILLS
ARCHITECTS PC
BWA

Project No: 19-10-207
Drawn by:
Date: 09-29-20

C1.1

NORTH

SITE PLAN

SCALE: 1" = 30'-0" @ 22"X34" (FULL SIZE) | 1" = 60'-0" @ 11"X17" (HALF SIZE)

0 30 60

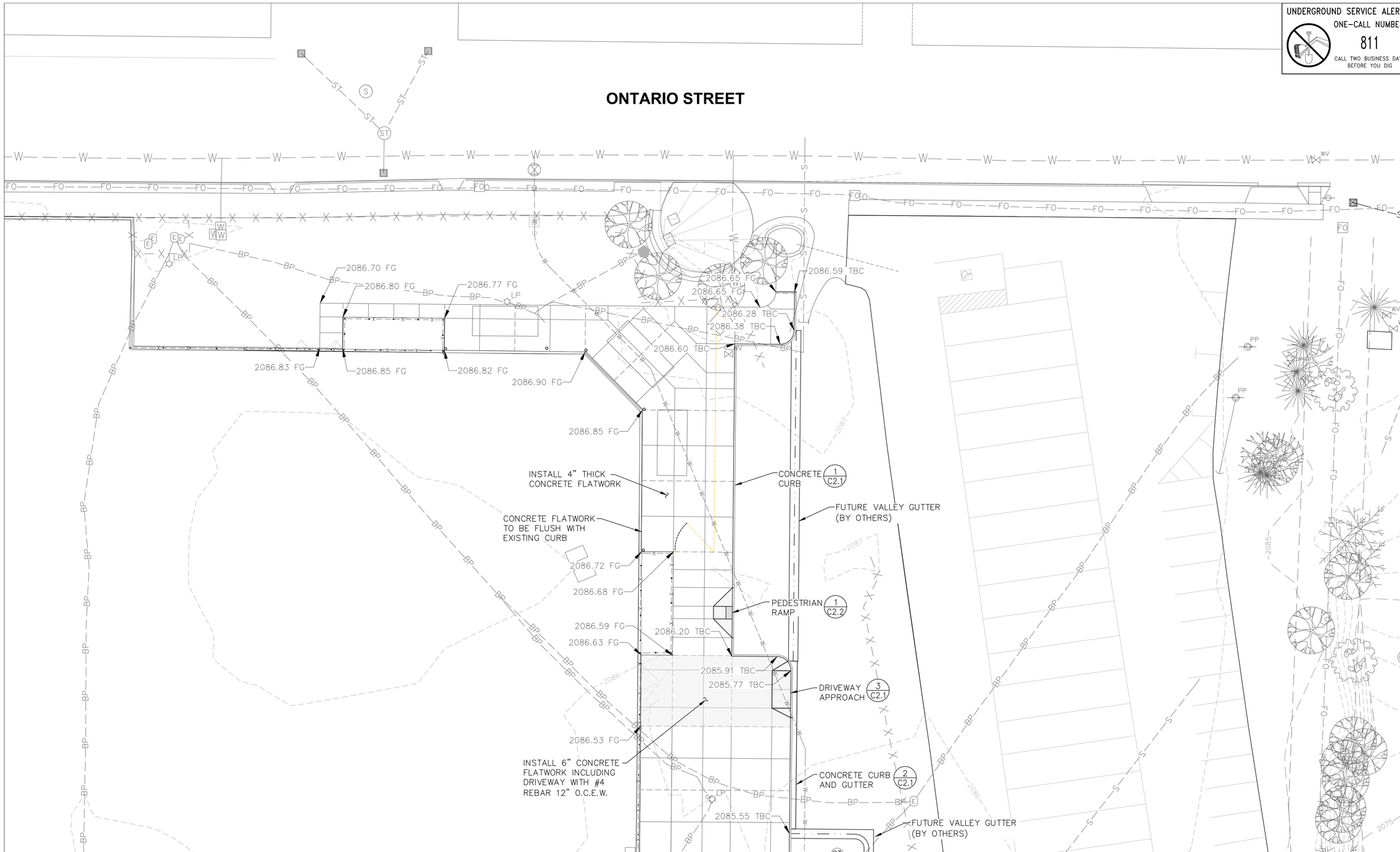

UNDERGROUND SERVICE ALERT
ONE-CALL NUMBER
811
CALL TWO BUSINESS DAYS BEFORE YOU DIG

PROFESSIONAL ENGINEER LICENSED 7898 STATE OF IDAHO PHILIP F. BOND
09/29/20

COPYRIGHT BERNARDO WILLS ARCHITECTS,PC 2013

WELCH-COMER ENGINEERS | SURVEYORS
www.welchcomer.com
330 E. Lakeside Ave. Suite 101
Coeur d'Alene, ID 83814
209-664-9382
(toll free) 877-815-3672
(fax) 208-664-4648

153 SOUTH JEFFERSON SPOKANE WASHINGTON 99201 509.838.4511 FAX 509.838.4605 WWW.BERNARDOWILLS.COM

BERNARDO | WILLS ARCHITECTS PC
B W A

100% BID SET
CONSTRUCTION SET

GRADING PLAN

War Memorial Field
Improvements - Phase 2A
Spring Facilities
801 Ontario Street
Sandpoint, Idaho 83864

NORTH

GRADING PLAN

SCALE: 1" = 15'-0" @ 22"X34" (FULL SIZE) | 1" = 30'-0" @ 11"X17" (HALF SIZE)

0 15 30

Project No: 19-10-207
Drawn by:
Date: 09-29-20

C1.2

MATCHLINE NORTH SHEET C1.2

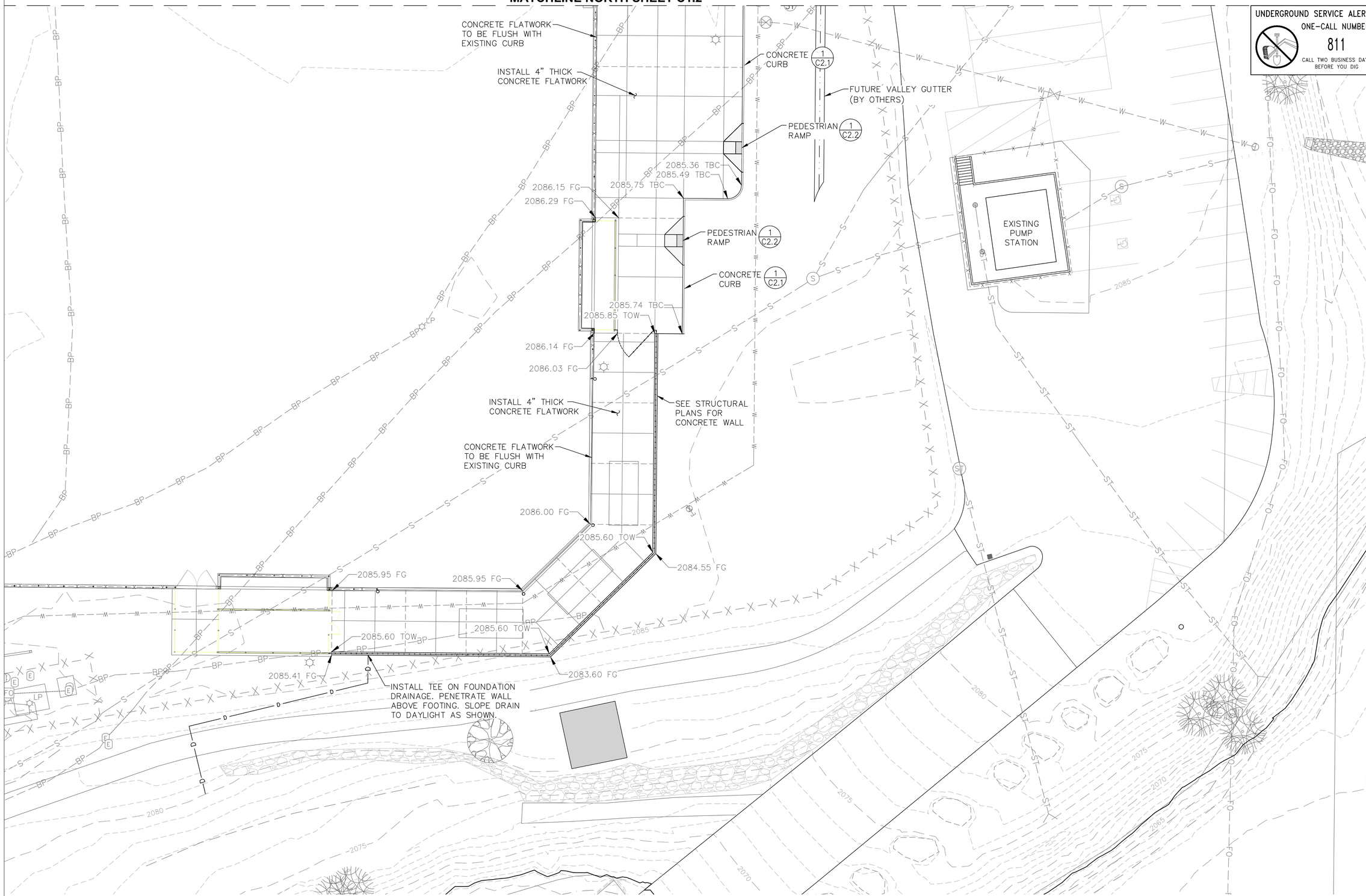

NORTH

GRADING PLAN

SCALE: 1" = 15'-0" @ 22"X34" (FULL SIZE) | 1" = 30'-0" @ 11"X17" (HALF SIZE)

0 15 30

COPYRIGHT BERNARDO WILLS ARCHITECTS,PC 2013

PROFESSIONAL ENGINEER LICENSED 7898 STATE OF IDAHO PHILIP F BOND 09/29/20

WELCH-COMER ENGINEERS | SURVEYORS
www.welchcomer.com
3301 E. Lakeside Ave. Suite 101
Coeur d'Alene, ID 83814
208-664-9382
(toll free) 877-815-9372
(fax) 208-664-4648

153 SOUTH JEFFERSON SPOKANE WASHINGTON 99201
509.838.4511 FAX 509.838.4605 WWW.BERNARDOWILLS.COM

100% BID SET
CONSTRUCTION SET

GRADING PLAN

War Memorial Field Improvements - Phase 2A
Spring Facilities
801 Ontario Street
Sandpoint, Idaho 83864

BERNARDO | WILLS ARCHITECTS PC

Project No: 19-10-207
Drawn by:
Date: 09-29-20

C1.3

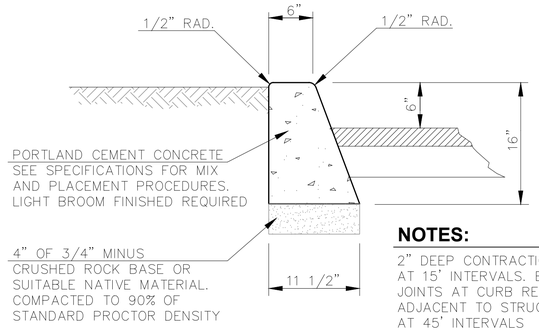

NOTES:

2" DEEP CONTRACTION JOINTS AT 15' INTERVALS. EXPANSION JOINTS AT CURB RETURNS, ADJACENT TO STRUCTURE AND AT 45' INTERVALS

STANDARD 6" STRAIGHT CONCRETE CURB DETAIL (1 / C2.1)

NO SCALE

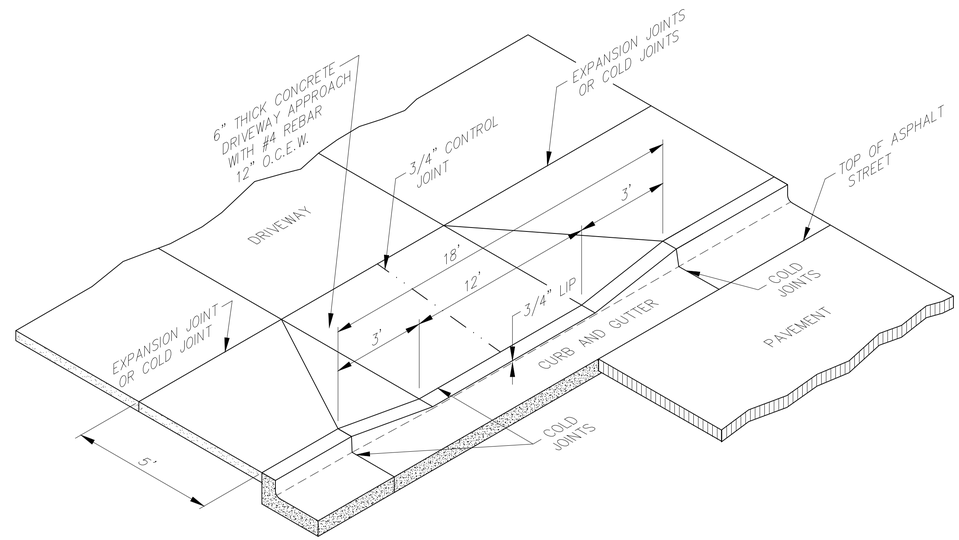

DRIVEWAY APPROACH DETAIL (3 / C2.1)

NO SCALE

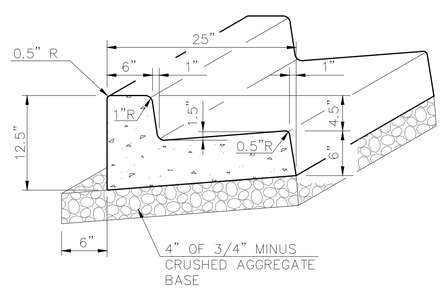

STANDARD 6" VERTICAL CURB & GUTTER (2 / C2.1)

NO SCALE

COPYRIGHT BERNARDO WILLS ARCHITECTS,PC 2013

PROFESSIONAL ENGINEER LICENSED 7898 STATE OF IDAHO PHILIP T. BOND
09/29/20

WELCH-COMER ENGINEERS | SURVEYORS
www.welchcomer.com
2307 Larkin Ave., Suite 101
Coeur d'Alene, ID 83814
208-664-5832
(toll free) 877-415-5872
(fax) 208-664-5946

153 SOUTH JEFFERSON SPOKANE WASHINGTON 99201 509.838.4511 FAX 509.838.4605 WWW.BERNARDOWILLS.COM

BERNARDO | WILLS ARCHITECTS PC
BWA

100% BID SET
CONSTRUCTION SET

CIVIL DETAILS

War Memorial Field
Improvements - Phase 2A
Spring Facilities
801 Ontario Street
Sandpoint, Idaho 83864

Project No: 19-10-207
Drawn by:
Date: 09-29-20

C2.1

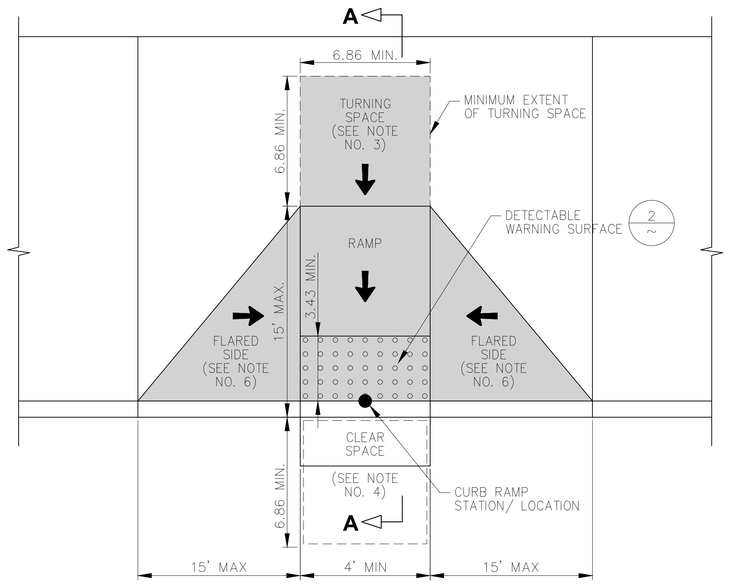

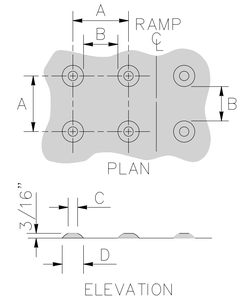

	MIN.	MAX.
A	1 5/8"	2 3/8"
B	5/8"	1 1/2"
C	7/16"	3/4"
D	7/8"	1 7/16"

NOTES:

THE DOMES SHALL BE CONTRASTING IN COLOR, AND ENGINEER APPROVED

TRUNCATED DOMES DETECTABLE WARNING PATTERN DETAIL

2 / C2.2

NO SCALE

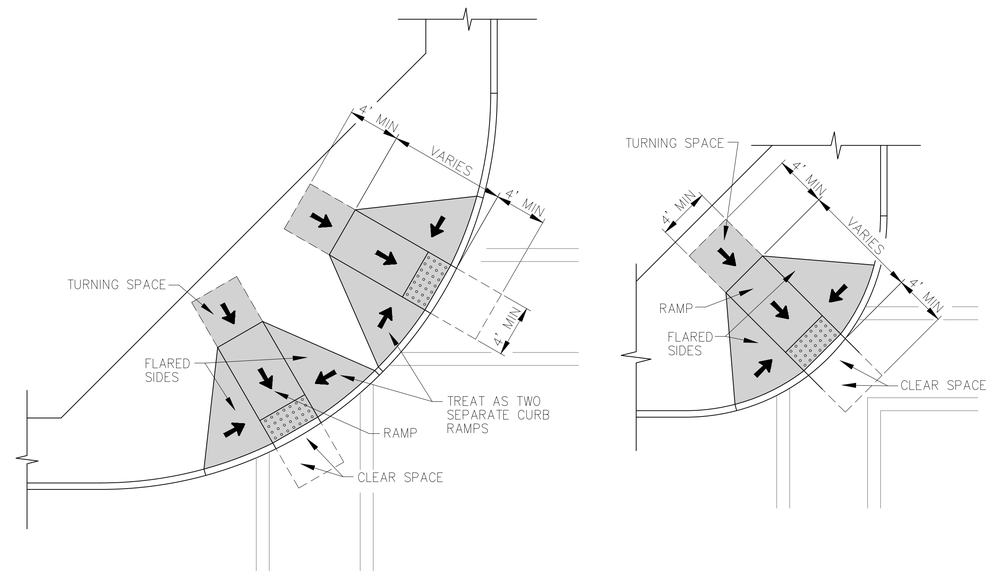

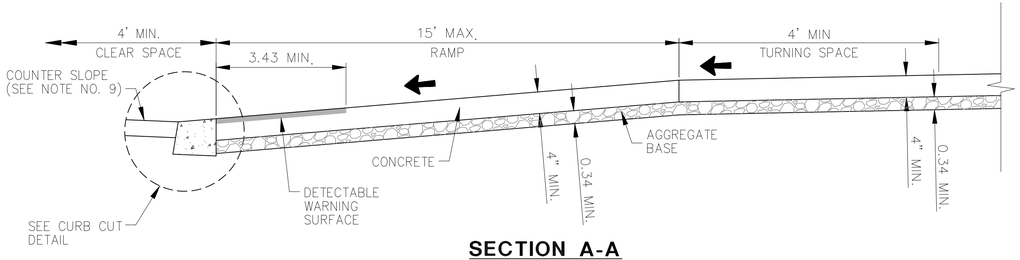

SECTION A-A

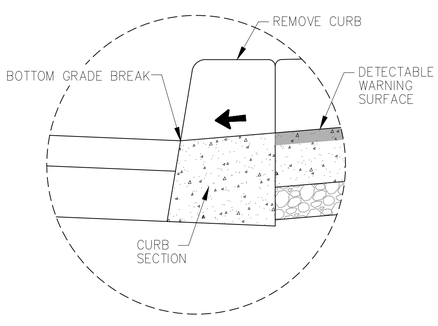

CURB CUT DETAIL

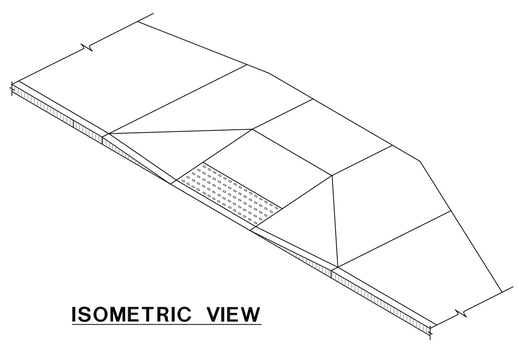

ISOMETRIC VIEW

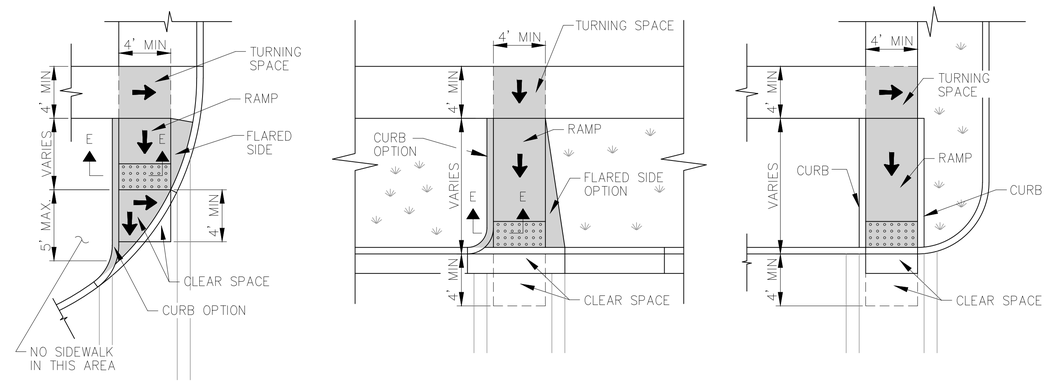

EXAMPLE APPLICATIONS

SYMBOL LEGEND

- 1.0% TO 2.0% SLOPE
- 5.0% TO 8.3% RUNNING SLOPE, 2.0% OR FLATTER CROSS SLOPE
- 10.0% OR FLATTER SLOPE

PEDESTRIAN RAMP DETAIL

1 / C2.2

NO SCALE

COPYRIGHT BERNARDO WILLS ARCHITECTS.PC 2013

PROFESSIONAL ENGINEER LICENSED 7898 STATE OF IDAHO PHILIP F. BOYD 09/29/20

WELCH-COMER ENGINEERS | SURVEYORS
www.welchcomer.com
2307 Larkin Ave., Suite 101
Coeur d'Alene, ID 83814
208-664-5832
(toll free) 877-664-5832
(fax) 208-664-5946

153 SOUTH JEFFERSON SPOKANE WASHINGTON 99201 509.838.4511 FAX 509.838.4605 WWW.BERNARDOWILLS.COM
BERNARDO | WILLS ARCHITECTS PC
B W A

100% BID SET
CONSTRUCTION SET

CIVIL DETAILS

War Memorial Field Improvements - Phase 2A
Spring Facilities
801 Ontario Street
Sandpoint, Idaho 83864

Project No: 19-10-207
Drawn by:
Date: 09-29-20

C2.2

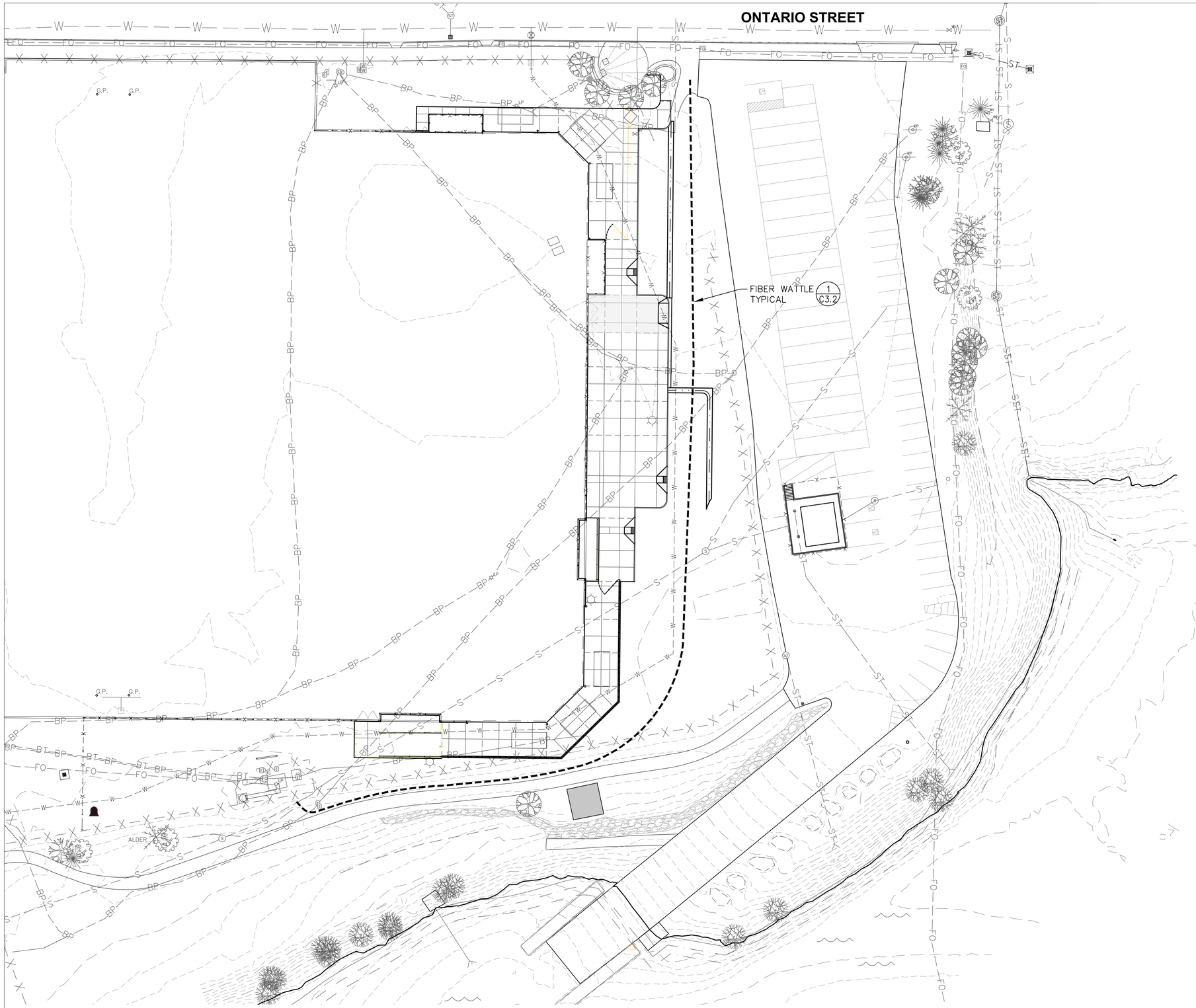

UNDERGROUND SERVICE ALERT
ONE-CALL NUMBER
811
CALL TWO BUSINESS DAYS BEFORE YOU DIG

PROFESSIONAL ENGINEER LICENSED 7898 STATE OF IDAHO PHILIP T. BOND
09/29/20

COPYRIGHT BERNARDO WILLS ARCHITECTS.PC 2013

WELCH-COMER ENGINEERS | SURVEYORS
www.welchcomer.com
2307 W Lakeside Ave, Suite 101
Coeur d'Alene, ID 83814
208-664-5832
(toll free) 877-664-5832
(fax) 208-664-5946

153 SOUTH JEFFERSON SPOKANE WASHINGTON 99201 509.838.4511 FAX 509.838.4605 WWW.BERNARDOWILLS.COM

BERNARDO | WILLS ARCHITECTS PC
B W A

100% BID SET
CONSTRUCTION SET

EROSION CONTROL PLAN

War Memorial Field Improvements - Phase 2A Spring Facilities

801 Ontario Street
Sandpoint, Idaho 83864

Project No: 19-10-207
Drawn by:
Date: 09-29-20

C3.1

EROSION CONTROL PLAN

SCALE: 1" = 30'-0" @ 22"X34" (FULL SIZE) | 1" = 60'-0" @ 11"X17" (HALF SIZE)

NORTH

0 30 60

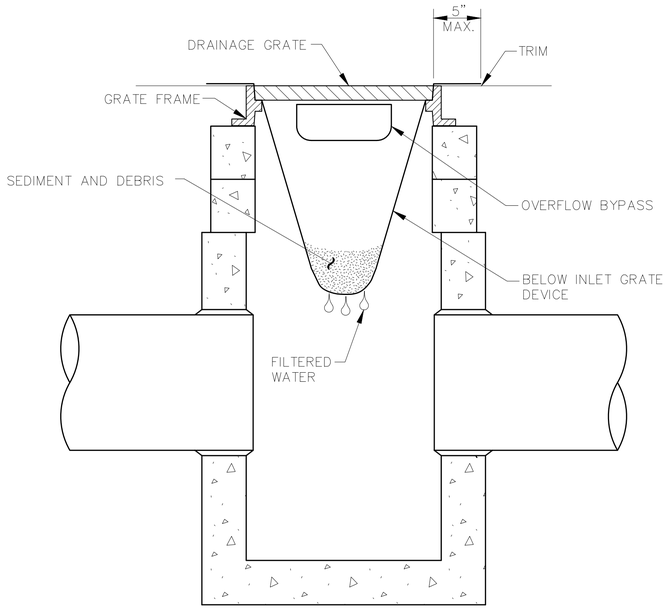

SECTION VIEW
NO SCALE

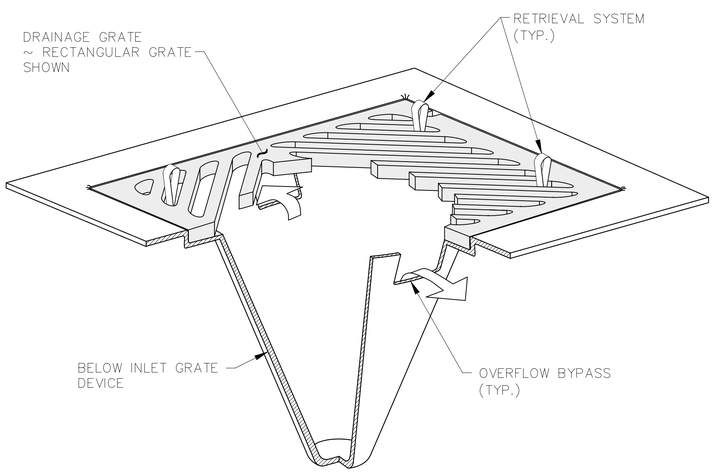

ISOMETRIC VIEW
NO SCALE

NOTES:

1. SIZE THE BELOW INLET GRATE DEVICE (BIGD) FOR THE STORM WATER STRUCTURE IT WILL SERVICE.
2. THE BIGD SHALL HAVE A BUILT-IN HIGH-FLOW RELIEF SYSTEM (OVERFLOW BYPASS).
3. THE RETRIEVAL SYSTEM MUST ALLOW REMOVAL OF THE BIGD WITHOUT SPILLING THE COLLECTED MATERIAL.
4. PERFORM MAINTENANCE IN ACCORDANCE WITH SWPPP.

STORM DRAIN INLET PROTECTION DETAIL (1 / C3.2)
NO SCALE

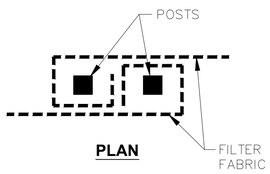

PLAN

BURRITO WRAP CONNECTION

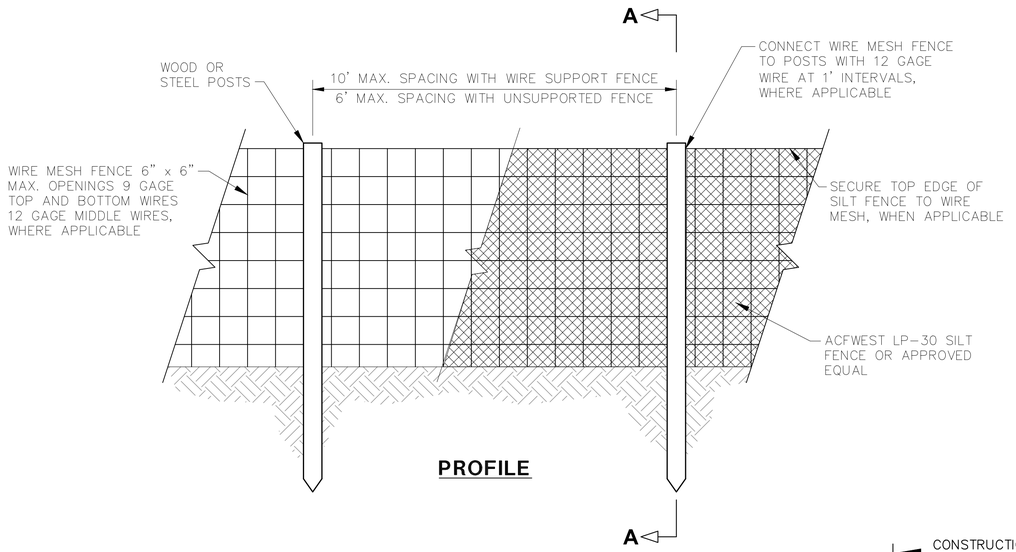

PROFILE

NOTES:

1. FILTER FABRIC AND WIRE MESH SUPPORT SHALL BE ATTACHED TO UPSTREAM SIDE OF POSTS.
2. REMOVE SEDIMENT AS NEEDED. MAXIMUM STORAGE HEIGHT IS 9".
3. ATTACHED TWO ROLLS OF SILT FENCE WITH BURRITO WRAP CONNECTION AS SHOWN.
4. UNSUPPORTED AND SUPPORTED (WITH WIRE MESH) ARE BOTH ALLOWED SO LONG AS THE SUPPORT DISTANCE IS ADJUSTED APPROPRIATELY.

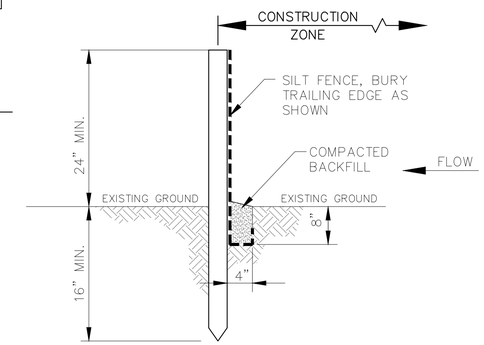

SECTION A-A

SILT FENCE DETAIL (2 / C3.2)
NO SCALE

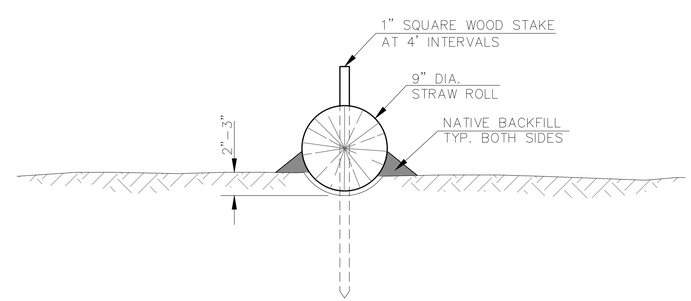

WATTLE INSTALLATION DETAIL (3 / C3.2)
NO SCALE

COPYRIGHT BERNARDO WILLS ARCHITECTS.PC 2013

PROFESSIONAL ENGINEER LICENSED 7898 STATE OF IDAHO PHILIP F. BOND 09/29/20

WELCH-COMER ENGINEERS | SURVEYORS
www.welchcomer.com
2307 W. Lakeside Ave., Suite 101
Coeur d'Alene, ID 83814
208-664-5832
(toll free) 877-664-5832
(fax) 208-664-5946

153 SOUTH JEFFERSON SPOKANE WASHINGTON 99201 509.838.4511 FAX 509.838.4605 WWW.BERNARDOWILLS.COM

100% BID SET
CONSTRUCTION SET

EROSION CONTROL DETAILS

War Memorial Field Improvements - Phase 2A
Spring Facilities
801 Ontario Street
Sandpoint, Idaho 83864

BWA BERNARDO | WILLS ARCHITECTS PC

Project No: 19-10-207
Drawn by:
Date: 09-29-20

C3.2

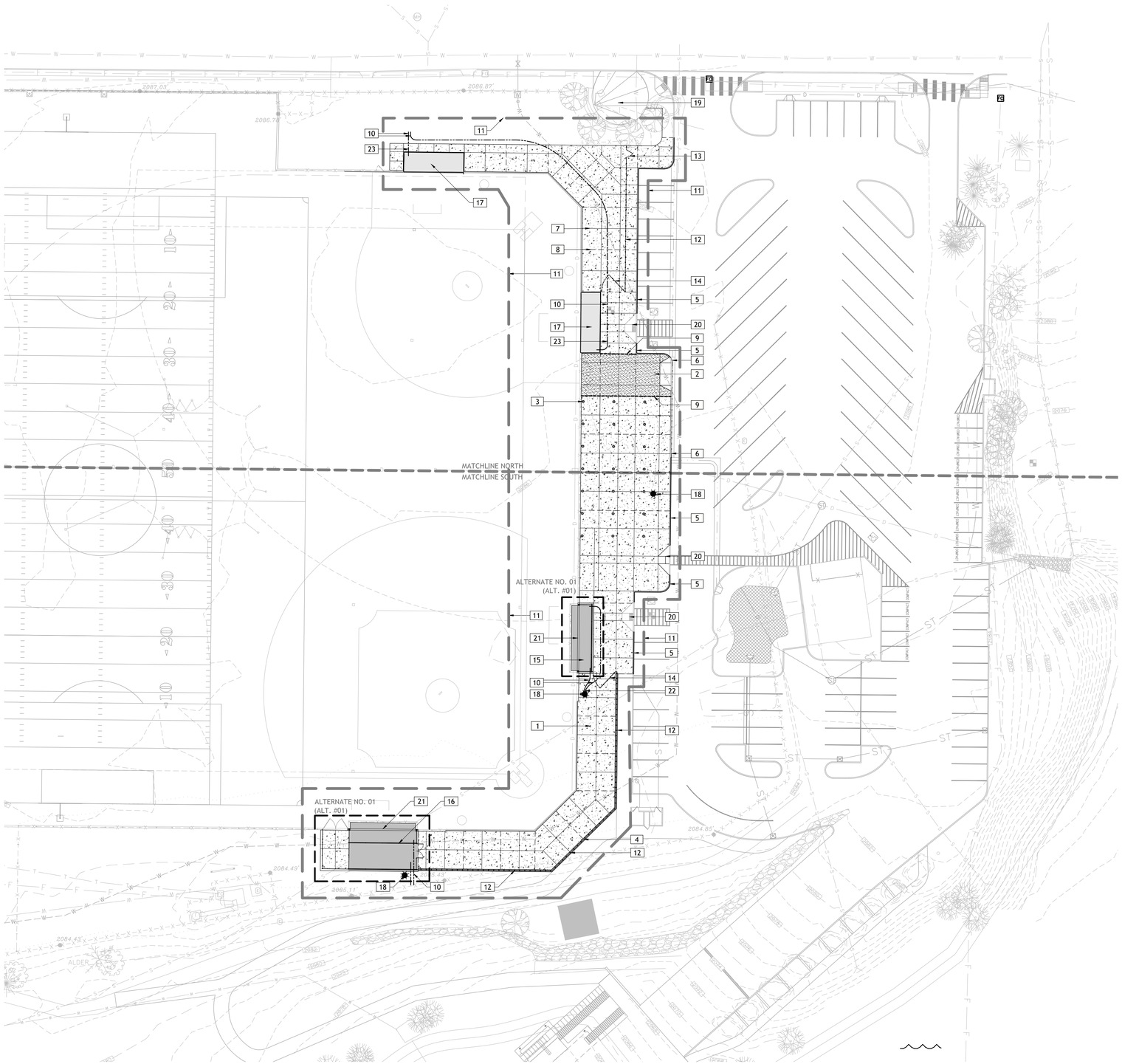

MATERIALS LEGEND

SYMBOL	DESCRIPTION	QTY
1	(4") STANDARD CONCRETE FLATWORK. BROOM FINISH. COLOR SHALL BE NATURAL GREY - (SEE DETAIL #01/SHEET L6.0)	14,219 SF
2	(6") THICKENED CONCRETE FLATWORK AT TRUCK DRIVE APPROACH. #4 REBAR AT 12" O.C. BROOM FINISH, COLOR SHALL BE NATURAL GREY - (SEE DETAILS #02/SHEET L6.0 & CIVIL SHEETS C1.2 & DETAIL #03/SHEET C2.1)	990 SF

SYMBOL	DESCRIPTION	QTY
3	CONCRETE EMBEDDED GROUND SLEEVE FOR BATTING CAGE POSTS. 2-3/8" O.D. X 27" DEEP SLEEVE W/ HINGED ALUMINUM CAP - (SEE DETAIL #06/SHEET L6.0)	21
4	NEW CAST-IN-PLACE CONCRETE RETAINING WALL W/ EMBEDDED FENCE POSTS - (SEE STRUCTURAL SHEETS & DETAIL #01/SHEET S0.1. SEE DETAILS #01-04/SHEET L6.3) DAYLIGHT PER CIVIL PLANS	192 LF
5	CONCRETE VERTICAL CURB - (SEE CIVIL SHEETS & DETAIL #01/SHEET C2.1)	249 LF
6	CONCRETE CURB & GUTTER - (SEE CIVIL SHEETS & DETAIL #02/SHEET C2.1)	67 LF
7	CONCRETE CONTROL JOINT, TYP. - (SEE DETAIL #04/SHEET L6.0)	2,123 LF
8	CONCRETE EXPANSION JOINT, TYP. - (SEE DETAIL #05/SHEET L6.0)	637 LF
9	CONCRETE W/ THICKENED EDGE & EXPANSION JOINT W/ DOWEL & GREASE SLEEVE - (SEE DETAIL #03/SHEET L6.0)	80 LF
10	(1") SCHEDULE 40 PVC ELECTRICAL CONDUIT, STUB UP & CAP ENDS. CONDUIT DEPTH PER ELECTRICAL CODE, MINIMUM (18-INCHES)	333 LF
11	PROJECT WORK BOUNDARY EXTENTS	
12	6FT. GALVANIZED CHAINLINK FENCE - (SEE SPECIFICATIONS & DETAIL #07/SHEET L6.0)	313 LF
13	6FT. HT. X 4FT WIDE SINGLE SWING CHAINLINK GATE - (SEE DETAIL #08/SHEET L6.0)	
14	6FT. HT. X 12FT. WIDE SINGLE SWING CHAINLINK GATE - (SEE DETAIL #08/SHEET L6.0)	
15	FIRST BASE BASBALL DUGOUT - (SEE DETAILS #01, 02, 03, 05, 06, & 07/SHEET L6.1)	
16	THIRD BASE BASEBALL DUGOUT & STORAGE STRUCTURE - (SEE DETAILS #03 - #07/SHEET L6.1 & DETAILS 01, 03, & 05/SHEET L6.3)	
17	EXISTING SOFTBALL DUGOUT TO REMAIN (PHASE I)	
18	EXISTING LIGHT FIXTURE TO REMAIN (PHASE I)	
19	EXISTING WAR MEMORIAL - PRESERVE & PROTECT	
20	ADA COMPLIANT STANDARD CAST IRON TACTILE WARNING TILES & PEDESTRIAN RAMP - (SEE CIVIL SHEETS & DETAIL SHEET C2.2)	
21	ALTERNATE NO. 01 (ALT. #01) - SUBSTITUTE THE BASE BID FULL-SPAN W10X54 STEEL I-BEAM WITH (2) TWO MID-SPAN W10X12 STEEL I-BEAMS W/ ADDITIONAL ADDED CENTER SUPPORT TUBE STEEL POST WITH TOP & ANCHOR PLATE - (SEE DETAILS #02, 04, & 06/SHEET L6.3) FOR ADDITIONAL INFORMATION	
22	REMOVE HAND HOLE & EXTEND (1") SCHEDULE 40 PVC ELECTRICAL CONDUIT TO SOUTHEAST CORNER BEHIND BENCH, & NORTH OF BAT/HELMET RACK. STUB UP & CAP	
23	EXTEND EXISTING (1") SCHEDULE 40 PVC ELECTRICAL CONDUIT FROM DUGOUT TO THE NORTH TO CLEAR THE FLATWORK AREA	

**** ALL QUANTITIES PROVIDED SHALL BE CONFIRMED BY CONTRACTOR AND ARE SHOWN FOR REFERENCE ONLY. IN THE CASE OF A DISCREPANCY BETWEEN THE SCHEDULE AND PLAN, THE PLAN LOCATION(S) SHALL DICTATE QUANTITY.****

ALTERNATE DESCRIPTION

ALTERNATE NO. 1 - (ALT. #1)

1. ALTERNATE NO. 1 INCLUDES THE SUBSTITUTION OF THE BASE BID FULL-SPAN W10X54 I-BEAM WITH A SMALLER W10X12 I-BEAM. THE ADDITION OF A 4-INCH SQUARE TUBE STEEL POST LOCATED AT THE MID-SPAN OF THE I-BEAM SHALL BE INSTALLED TO ASSIST WITH CARRYING THE I-BEAM LOAD OVERHEAD. A TOP PLATE AND BOTTOM BASE PLATE SHALL BE WELDED TO THE MID-SPAN POST AND ATTACHED TO THE I-BEAM ABOVE AND ANCHORED TO THE CONCRETE BELOW PER DETAILS #02, 04, & 06/SHEET L6.2. AN ADDITIONAL CONCRETE FOOTING WILL BE REQUIRED AS WELL UNDER THE MID-SPAN TUBE STEEL POST.

1 MATERIALS PLAN (OVERALL)

SCALE: 1" = 30'-0" @ 22"x34" (FULL SIZE) | 1" = 60'-0" @ 11"x17" (HALF SIZE)

0 30 60 90

NORTH

UNDERGROUND SERVICE ALERT
ONE-CALL NUMBER
811 OR
(800)342-1585
CALL TWO BUSINESS DAYS BEFORE YOU DIG

COPYRIGHT BERNARDO WILLS ARCHITECTS,PC 2013

STATE OF IDAHO
DONALD R HAYDEN
LA-150
09-29-20
LICENSED LANDSCAPE ARCHITECT

100% BID SET
CONSTRUCTION SET
MATERIALS PLAN
OVERALL

153 SOUTH JEFFERSON SPOKANE WASHINGTON 99201 509.838.4511 FAX 509.838.4605 WWW.BERNARDOWILLS.COM

War Memorial Field Improvements - Phase 2A Spring Facilities

801 Ontario Street
Sandpoint, Idaho 83864

BERNARDO | WILLS
ARCHITECTS PC

Project No: 19-10-207
Drawn by: JD
Date: 09-29-20

L1.0

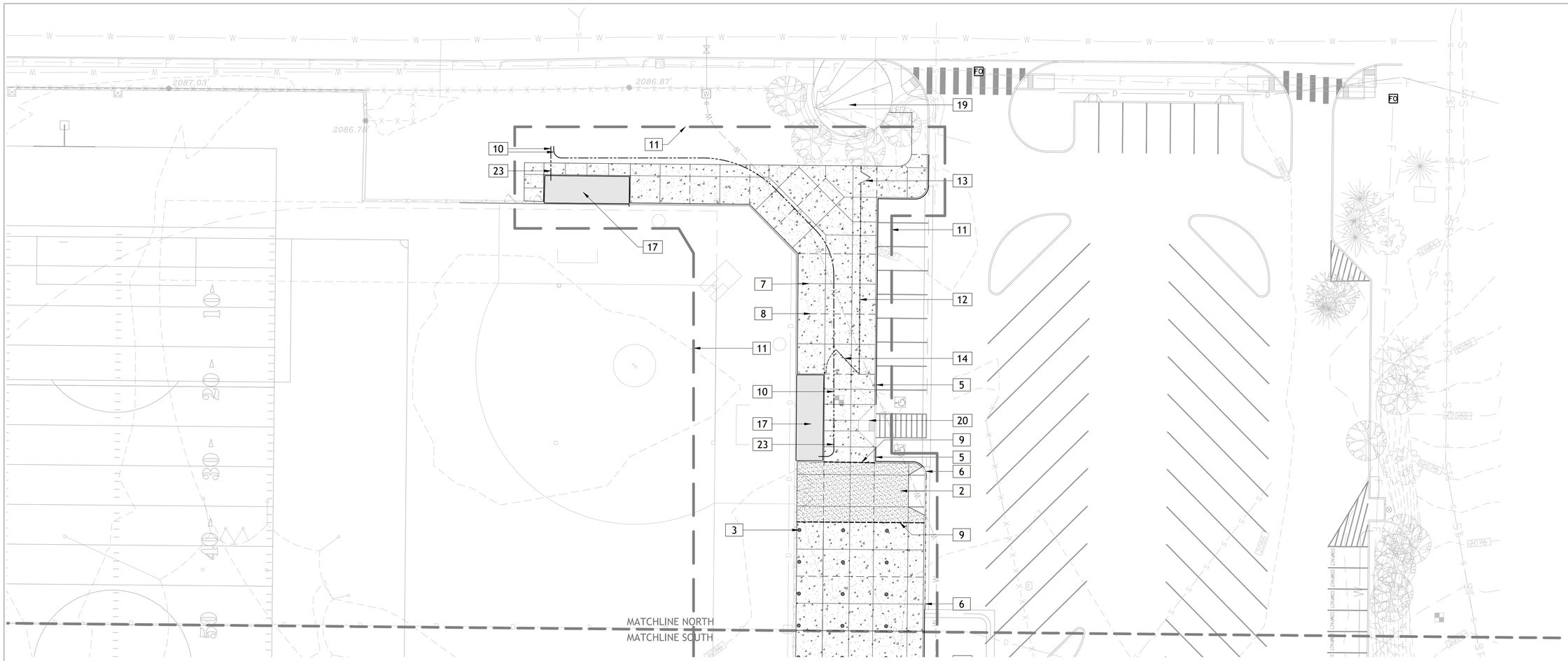

MATERIALS LEGEND

SYMBOL		DESCRIPTION	QTY
	1	(4") STANDARD CONCRETE FLATWORK. BROOM FINISH. COLOR SHALL BE NATURAL GREY - (SEE DETAIL #01/SHEET L6.0)	14,219 SF
	2	(6") THICKENED CONCRETE FLATWORK AT TRUCK DRIVE APPROACH. #4 REBAR AT 12" O.C. BROOM FINISH, COLOR SHALL BE NATURAL GREY - (SEE DETAILS #02/SHEET L6.0 & CIVIL SHEETS C1.2 & DETAIL #03/SHEET C2.1)	990 SF

SYMBOL		DESCRIPTION	QTY
	3	CONCRETE EMBEDDED GROUND SLEEVE FOR BATTING CAGE POSTS. 2-3/8" O.D. X 27" DEEP SLEEVE W/ HINGED ALUMINUM CAP - (SEE DETAIL #06/SHEET L6.0)	21
	4	NEW CAST-IN-PLACE CONCRETE RETAINING WALL W/ EMBEDDED FENCE POSTS - (SEE STRUCTURAL SHEETS & DETAIL #01/SHEET S0.1. SEE DETAILS #01-04/SHEET L6.3) DAYLIGHT PER CIVIL PLANS	192 LF
	5	CONCRETE VERTICAL CURB - (SEE CIVIL SHEETS & DETAIL #01/SHEET C2.1)	249 LF
	6	CONCRETE CURB & GUTTER - (SEE CIVIL SHEETS & DETAIL #02/SHEET C2.1)	67 LF
	7	CONCRETE CONTROL JOINT, TYP. - (SEE DETAIL #04/SHEET L6.0)	2,123 LF
	8	CONCRETE EXPANSION JOINT, TYP. - (SEE DETAIL #05/SHEET L6.0)	637 LF
	9	CONCRETE W/ THICKENED EDGE & EXPANSION JOINT W/ DOWEL & GREASE SLEEVE - (SEE DETAIL #03/SHEET L6.0)	80 LF
	10	(1") SCHEDULE 40 PVC ELECTRICAL CONDUIT, STUB UP & CAP ENDS. CONDUIT DEPTH PER ELECTRICAL CODE, MINIMUM (18-INCHES)	333 LF
	11	PROJECT WORK BOUNDARY EXTENTS	
	12	6FT. GALVANIZED CHAINLINK FENCE - (SEE SPECIFICATIONS & DETAIL #07/SHEET L6.0)	313 LF
	13	6FT. HT. X 4FT WIDE SINGLE SWING CHAINLINK GATE - (SEE DETAIL #08/SHEET L6.0)	
	14	6FT. HT. X 12FT. WIDE SINGLE SWING CHAINLINK GATE - (SEE DETAIL #08/SHEET L6.0)	
	15	FIRST BASE BASBALL DUGOUT - (SEE DETAILS #01, 02, 03, 05, 06, & 07/SHEET L6.1)	
	16	THIRD BASE BASEBALL DUGOUT & STORAGE STRUCTURE - (SEE DETAILS #03 - #07/SHEET L6.1 & DETAILS 01, 03, & 05/SHEET L6.3)	
	17	EXISTING SOFTBALL DUGOUT TO REMAIN (PHASE I)	
	18	EXISTING LIGHT FIXTURE TO REMAIN (PHASE I)	
	19	EXISTING WAR MEMORIAL - PRESERVE & PROTECT	
	20	ADA COMPLIANT STANDARD CAST IRON TACTILE WARNING TILES & PEDESTRIAN RAMP - (SEE CIVIL SHEETS & DETAIL SHEET C2.2)	
	21	ALTERNATE NO. 01 (ALT. #01) - SUBSTITUTE THE BASE BID FULL-SPAN W10X54 STEEL I-BEAM WITH (2) TWO MID-SPAN W10X12 STEEL I-BEAMS W/ ADDITIONAL ADDED CENTER SUPPORT TUBE STEEL POST WITH TOP & ANCHOR PLATE - (SEE DETAILS #02, 04, & 06/SHEET L6.3) FOR ADDITIONAL INFORMATION	
	22	REMOVE HAND HOLE & EXTEND (1") SCHEDULE 40 PVC ELECTRICAL CONDUIT TO SOUTHEAST CORNER BEHIND BENCH, & NORTH OF BAT/HELMET RACK. STUB UP & CAP	
	23	EXTEND EXISTING (1") SCHEDULE 40 PVC ELECTRICAL CONDUIT FROM DUGOUT TO THE NORTH TO CLEAR THE FLATWORK AREA	

**** ALL QUANTITIES PROVIDED SHALL BE CONFIRMED BY CONTRACTOR AND ARE SHOWN FOR REFERENCE ONLY. IN THE CASE OF A DISCREPANCY BETWEEN THE SCHEDULE AND PLAN, THE PLAN LOCATION(S) SHALL DICTATE QUANTITY.****

CONSTRUCTION NOTES

1. CONTRACTOR TO VERIFY LOCATION OF ALL UTILITIES PRIOR TO INITIATION OF ANY DEMOLITION OR CONSTRUCTION OPERATIONS. ANY DAMAGE TO EXISTING UTILITIES ON SITE OR ADJACENT PROPERTY SHALL BE CONTRACTOR'S RESPONSIBILITY TO CORRECT.
2. COORDINATE ALL DEMOLITION AND CONSTRUCTION OPERATIONS WITH CIVIL & STRUCTURAL ENGINEERING SHEETS.
3. COORDINATE INSTALLATION OF ELECTRICAL CONDUIT AND SLEEVES WITH RESPECTIVE CONTRACTORS.
4. PROVIDE TOOLED SCORE JOINTS AS SHOWN ON PLANS. SCORE JOINTS ARE AN INTEGRAL PART OF THE DESIGN AND SHALL NOT VARY FROM PATTERNS AND LOCATIONS SHOWN. CONTRACTOR SHALL REMOVE ANY FLATWORK THAT DOES NOT CONFORM TO DESIGN.
5. CONTRACTOR SHALL REFER TO SPECIFICATIONS FOR ADDITIONAL REQUIREMENTS.
6. CONTRACTOR RESPONSIBLE FOR CORRECTING ANY DAMAGE TO NEW OR EXISTING CONCRETE FLATWORK, ASPHALT, TURF AREAS OR ANY OTHER EXISTING ELEMENTS AS A RESULT OF CONSTRUCTION ACTIVITIES.
7. IN THE EVENT OF A DISCREPANCY, IMMEDIATELY NOTIFY LANDSCAPE ARCHITECT.

1 MATERIALS PLAN (NORTH)

SCALE: 1" = 20'-0" @ 22"x34" (FULL SIZE) | 1" = 40'-0" @ 11"x17" (HALF SIZE)

0 20 40 60

NORTH

UNDERGROUND SERVICE ALERT
ONE-CALL NUMBER
811 OR
(800)342-1585
CALL TWO BUSINESS DAYS BEFORE YOU DIG

COPYRIGHT BERNARDO WILLS ARCHITECTS,PC 2013

STATE OF IDAHO
LICENSED LANDSCAPE ARCHITECT
LA-150
09-29-20

100% BID SET
CONSTRUCTION SET
MATERIALS PLAN
NORTH

153 SOUTH JEFFERSON SPOKANE WASHINGTON 99201 509.838.4511 FAX 509.838.4605 WWW.BERNARDOWILLS.COM

War Memorial Field
Improvements - Phase 2A
Spring Facilities
801 Ontario Street
Sandpoint, Idaho 83864

BERNARDO | WILLS
ARCHITECTS PC

Project No: 19-10-207
Drawn by: JD
Date: 09-29-20

L1.1

MATERIALS LEGEND

SYMBOL	DESCRIPTION	QTY
1	(4") STANDARD CONCRETE FLATWORK. BROOM FINISH. COLOR SHALL BE NATURAL GREY - (SEE DETAIL #01/SHEET L6.0)	14,219 SF
2	(6") THICKENED CONCRETE FLATWORK AT TRUCK DRIVE APPROACH. #4 REBAR AT 12" O.C. BROOM FINISH, COLOR SHALL BE NATURAL GREY - (SEE DETAILS #02/SHEET L6.0 & CIVIL SHEETS C1.2 & DETAIL #03/SHEET C2.1)	990 SF

SYMBOL	DESCRIPTION	QTY
3	CONCRETE EMBEDDED GROUND SLEEVE FOR BATTING CAGE POSTS. 2-3/8" O.D. X 27" DEEP SLEEVE W/ HINGED ALUMINUM CAP - (SEE DETAIL #06/SHEET L6.0)	21
4	NEW CAST-IN-PLACE CONCRETE RETAINING WALL W/ EMBEDDED FENCE POSTS - (SEE STRUCTURAL SHEETS & DETAIL #01/SHEET S0.1. SEE DETAILS #01-04/SHEET L6.3) DAYLIGHT PER CIVIL PLANS	192 LF
5	CONCRETE VERTICAL CURB - (SEE CIVIL SHEETS & DETAIL #01/SHEET C2.1)	249 LF
6	CONCRETE CURB & GUTTER - (SEE CIVIL SHEETS & DETAIL #02/SHEET C2.1)	67 LF
7	CONCRETE CONTROL JOINT, TYP. - (SEE DETAIL #04/SHEET L6.0)	2,123 LF
8	CONCRETE EXPANSION JOINT, TYP. - (SEE DETAIL #05/SHEET L6.0)	637 LF
9	CONCRETE W/ THICKENED EDGE & EXPANSION JOINT W/ DOWEL & GREASE SLEEVE - (SEE DETAIL #03/SHEET L6.0)	80 LF
10	(1") SCHEDULE 40 PVC ELECTRICAL CONDUIT, STUB UP & CAP ENDS. CONDUIT DEPTH PER ELECTRICAL CODE, MINIMUM (18-INCHES)	333 LF
11	PROJECT WORK BOUNDARY EXTENTS	
12	6FT. GALVANIZED CHAINLINK FENCE - (SEE SPECIFICATIONS & DETAIL #07/SHEET L6.0)	313 LF
13	6FT. HT. X 4FT WIDE SINGLE SWING CHAINLINK GATE - (SEE DETAIL #08/SHEET L6.0)	
14	6FT. HT. X 12FT. WIDE SINGLE SWING CHAINLINK GATE - (SEE DETAIL #08/SHEET L6.0)	
15	FIRST BASE BASBALL DUGOUT - (SEE DETAILS #01, 02, 03, 05, 06, & 07/SHEET L6.1)	
16	THIRD BASE BASEBALL DUGOUT & STORAGE STRUCTURE - (SEE DETAILS #03 - #07/SHEET L6.1 & DETAILS 01, 03, & 05/SHEET L6.3)	
17	EXISTING SOFTBALL DUGOUT TO REMAIN (PHASE I)	
18	EXISTING LIGHT FIXTURE TO REMAIN (PHASE I)	
19	EXISTING WAR MEMORIAL - PRESERVE & PROTECT	
20	ADA COMPLIANT STANDARD CAST IRON TACTILE WARNING TILES & PEDESTRIAN RAMP - (SEE CIVIL SHEETS & DETAIL SHEET C2.2)	
21	ALTERNATE NO. 01 (ALT. #01) - SUBSTITUTE THE BASE BID FULL-SPAN W10X54 STEEL I-BEAM WITH (2) TWO MID-SPAN W10X12 STEEL I-BEAMS W/ ADDITIONAL ADDED CENTER SUPPORT TUBE STEEL POST WITH TOP & ANCHOR PLATE - (SEE DETAILS #02, 04, & 06/SHEET L6.3) FOR ADDITIONAL INFORMATION	
22	REMOVE HAND HOLE & EXTEND (1") SCHEDULE 40 PVC ELECTRICAL CONDUIT TO SOUTHEAST CORNER BEHIND BENCH, & NORTH OF BAT/HELMET RACK. STUB UP & CAP	
23	EXTEND EXISTING (1") SCHEDULE 40 PVC ELECTRICAL CONDUIT FROM DUGOUT TO THE NORTH TO CLEAR THE FLATWORK AREA	

CONSTRUCTION NOTES

1. CONTRACTOR TO VERIFY LOCATION OF ALL UTILITIES PRIOR TO INITIATION OF ANY DEMOLITION OR CONSTRUCTION OPERATIONS. ANY DAMAGE TO EXISTING UTILITIES ON SITE OR ADJACENT PROPERTY SHALL BE CONTRACTOR'S RESPONSIBILITY TO CORRECT.
2. COORDINATE ALL DEMOLITION AND CONSTRUCTION OPERATIONS WITH CIVIL & STRUCTURAL ENGINEERING SHEETS.
3. COORDINATE INSTALLATION OF ELECTRICAL CONDUIT AND SLEEVES WITH RESPECTIVE CONTRACTORS.
4. PROVIDE TOOLED SCORE JOINTS AS SHOWN ON PLANS. SCORE JOINTS ARE AN INTEGRAL PART OF THE DESIGN AND SHALL NOT VARY FROM PATTERNS AND LOCATIONS SHOWN. CONTRACTOR SHALL REMOVE ANY FLATWORK THAT DOES NOT CONFORM TO DESIGN.
5. CONTRACTOR SHALL REFER TO SPECIFICATIONS FOR ADDITIONAL REQUIREMENTS.
6. CONTRACTOR RESPONSIBLE FOR CORRECTING ANY DAMAGE TO NEW OR EXISTING CONCRETE FLATWORK, ASPHALT, TURF AREAS OR ANY OTHER EXISTING ELEMENTS AS A RESULT OF CONSTRUCTION ACTIVITIES.
7. IN THE EVENT OF A DISCREPANCY, IMMEDIATELY NOTIFY LANDSCAPE ARCHITECT.

**** ALL QUANTITIES PROVIDED SHALL BE CONFIRMED BY CONTRACTOR AND ARE SHOWN FOR REFERENCE ONLY. IN THE CASE OF A DISCREPANCY BETWEEN THE SCHEDULE AND PLAN, THE PLAN LOCATION(S) SHALL DICTATE QUANTITY.****

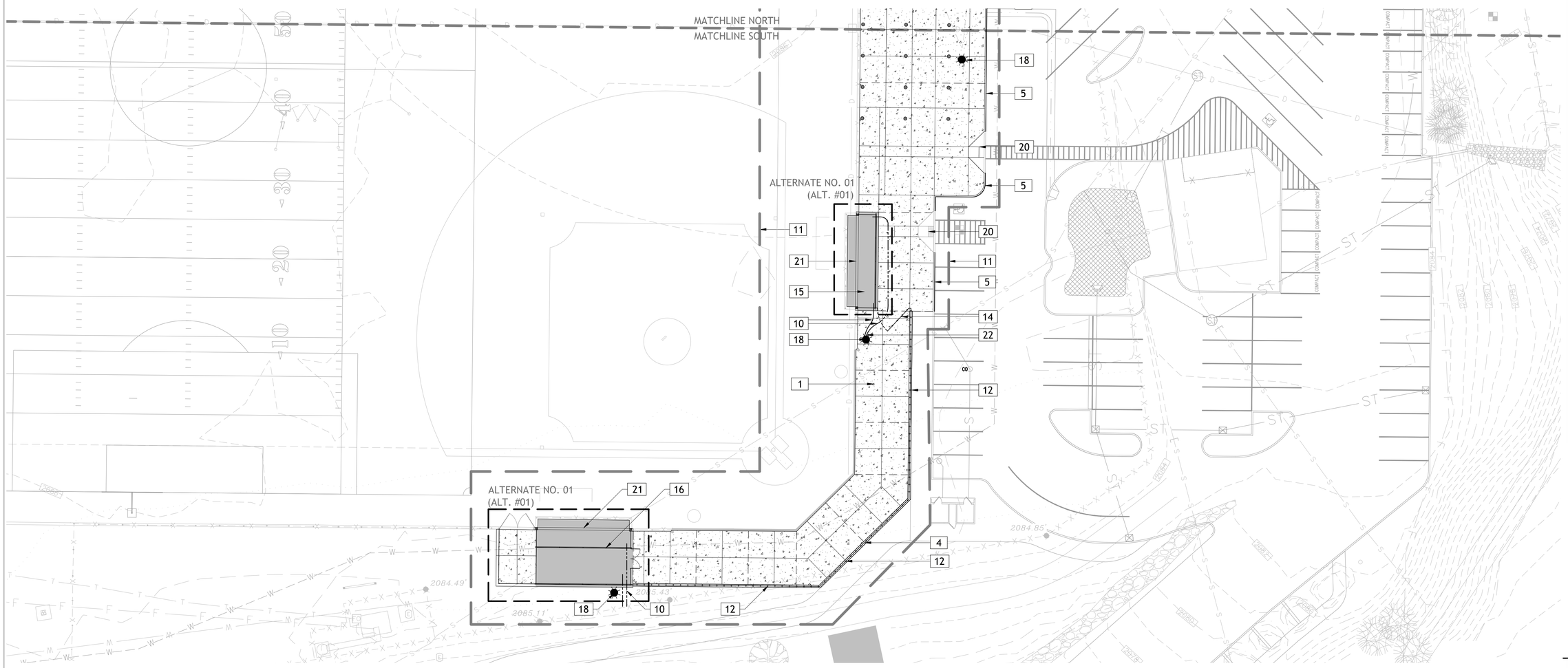

1 MATERIALS PLAN (SOUTH)

SCALE: 1" = 20'-0" @ 22"x34" (FULL SIZE) | 1" = 40'-0" @ 11"x17" (HALF SIZE)

0 20 40 60

NORTH

UNDERGROUND SERVICE ALERT
ONE-CALL NUMBER
811 OR
(800)342-1585
CALL TWO BUSINESS DAYS BEFORE YOU DIG

COPYRIGHT BERNARDO WILLS ARCHITECTS,PC 2013

STATE OF IDAHO
DAVID R. HAGEN
LICENSED LANDSCAPE ARCHITECT
LA-150
09-29-20

153 SOUTH JEFFERSON SPOKANE WASHINGTON 99201 509.838.4511 FAX 509.838.4605 WWW.BERNARDOWILLS.COM

BERNARDO | WILLS ARCHITECTS PC

100% BID SET
CONSTRUCTION SET
MATERIALS PLAN
SOUTH

War Memorial Field
Improvements - Phase 2A
Spring Facilities
801 Ontario Street
Sandpoint, Idaho 83864

BWA

Project No: 19-10-207
Drawn by: JD
Date: 09-29-20

L1.2

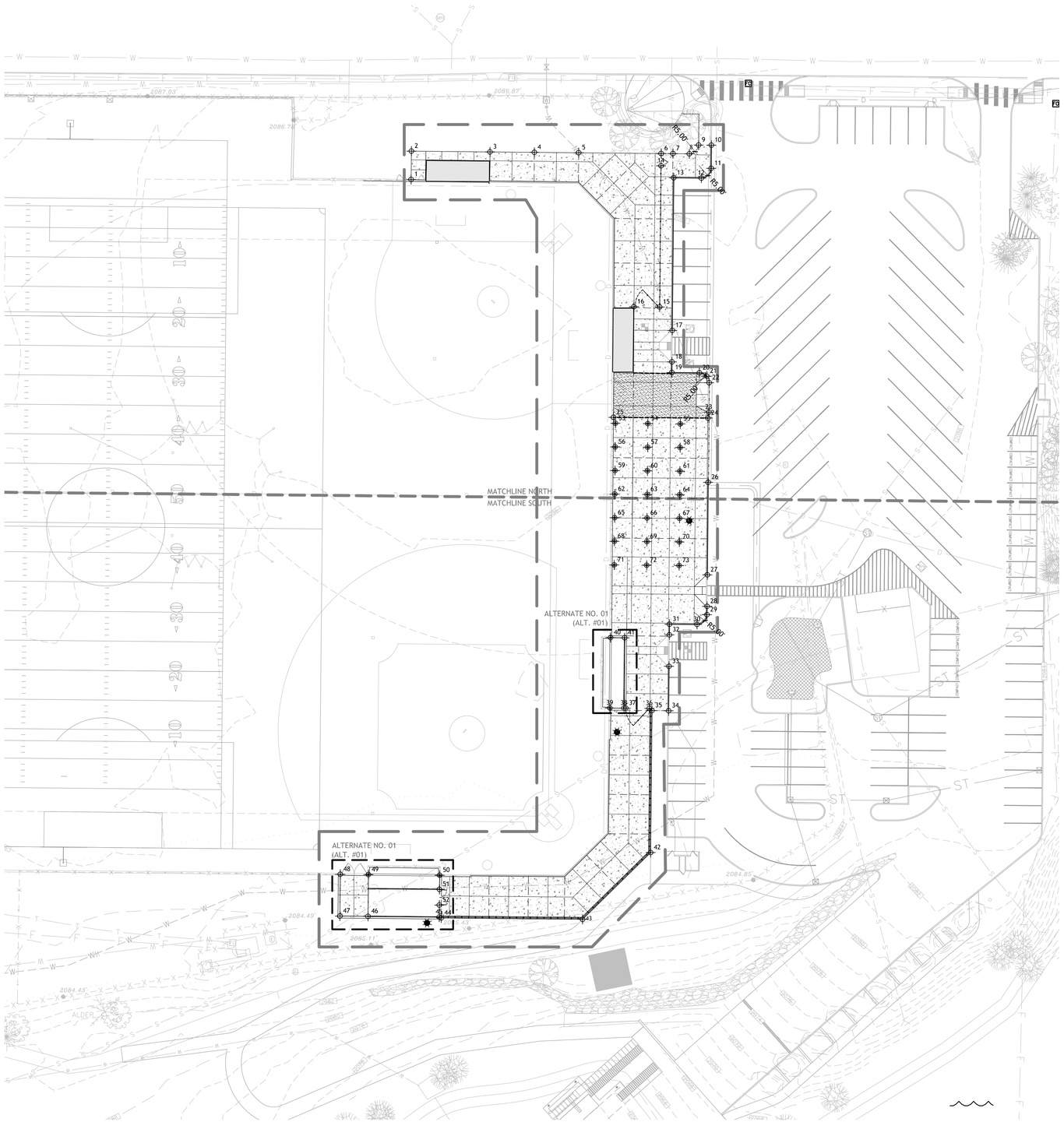

NORTHINGS & EASTINGS POINT SCHEDULE

POINT	DESCRIPTION	NORTHING	EASTING
1	EDGE OF CONCRETE	N 2406866.5951	E 2427760.9447
2	EDGE OF CONCRETE	N 2406880.9746	E 2427761.0804
3	EDGE OF CONCRETE	N 2406880.5979	E 2427801.0001
4	EDGE OF CONCRETE	N 2406880.3851	E 2427823.5559
5	EDGE OF CONCRETE	N 2406880.1723	E 2427846.1099
6	6FT HT. CHAINLINK FENCE END POST	N 2406879.7768	E 2427888.0214
7	EDGE OF CONCRETE	N 2406879.7201	E 2427894.0211
8	EDGE OF CONCRETE/BEGIN RADIUS	N 2406879.6545	E 2427902.3849
9	EDGE OF CONCRETE/END RADIUS	N 2406884.0973	E 2427907.0631
10	EDGE OF CURB	N 2406884.0359	E 2427913.5628
11	EDGE OF CURB/BEGIN RADIUS	N 2406872.2306	E 2427913.4514
12	EDGE OF CURB/END RADIUS	N 2406867.2778	E 2427908.4516
13	EDGE OF CURB	N 2406867.4101	E 2427894.4050
14	6FT HT. CHAINLINK GATE POST	N 2406873.5455	E 2427887.9626
15	6FT HT. CHAINLINK GATE POST	N 2406801.7477	E 2427887.2851
16	6FT HT. CHAINLINK GATE POST	N 2406801.8721	E 2427874.2353
17	EDGE OF CURB	N 2406789.8202	E 2427893.6728
18	EDGE OF CURB	N 2406773.8210	E 2427893.5219
19	EDGE OF CURB	N 2406768.4145	E 2427893.4709
20	EDGE OF CURB/BEGIN RADIUS	N 2406768.2824	E 2427907.4703
21	EDGE OF CURB/BEGIN CURB WITH GUTTER	N 2406766.5776	E 2427911.1839
22	EDGE OF CURB/END RADIUS	N 2406763.2355	E 2427912.4229
23	EDGE OF CURB	N 2406748.2373	E 2427912.2814
24	EDGE OF THICKENED FLATWORK	N 2406745.2767	E 2427911.7823
25	EDGE OF THICKENED FLATWORK	N 2406745.6138	E 2427863.7846
26	EDGE OF CURB/END CURB WITH GUTTER	N 2406712.6048	E 2427911.9452
27	EDGE OF CURB	N 2406665.5420	E 2427911.5011
28	EDGE OF CURB	N 2406649.5427	E 2427911.3502
29	EDGE OF CURB/BEGIN RADIUS	N 2406645.2828	E 2427911.3100
30	EDGE OF CURB/END RADIUS	N 2406640.3302	E 2427906.2630
31	EDGE OF CURB	N 2406640.4623	E 2427892.2636
32	EDGE OF CURB	N 2406635.0434	E 2427892.2125
33	EDGE OF CURB	N 2406619.0445	E 2427892.0216
34	END OF CURB/END OF CONCRETE	N 2406596.4642	E 2427891.8485
35	END OF CONCRETE/START OF WALL	N 2406596.5444	E 2427883.3489
36	6FT HT. CHAINLINK GATE POST	N 2406597.6614	E 2427882.0293
37	6FT HT. CHAINLINK GATE POST	N 2406597.7746	E 2427870.0299
38	SE CORNER FIRST BASE BASEBALL DUGOUT POST	N 2406597.7829	E 2427869.1490
39	SW CORNER FIRST BASE BASEBALL DUGOUT POST	N 2406597.8507	E 2427861.9842
40	NW CORNER FIRST BASE BASEBALL DUGOUT POST	N 2406633.6164	E 2427862.3245
41	NE CORNER FIRST BASE BASEBALL DUGOUT POST	N 2406633.5487	E 2427869.4873
42	EDGE OF CONCRETE WALL	N 2406524.3293	E 2427882.6675
43	EDGE OF CONCRETE WALL	N 2406490.4050	E 2427848.0969
44	END OF CONCRETE WALL	N 2406491.0865	E 2427776.2072
45	SE CORNER THIRD BASE BASEBALL DUGOUT POST	N 2406491.5652	E 2427775.2117
46	SW CORNER THIRD BASE BASEBALL DUGOUT POST	N 2406491.9066	E 2427739.0293
47	SW CORNER THIRD BASE BASEBALL OPEN STORAGE POST	N 2406492.0417	E 2427724.7117
48	EXISTING POST	N 2406513.2720	E 2427724.9120
49	NW CORNER THIRD BASE BASEBALL DUGOUT POST	N 2406513.1473	E 2427739.2298
50	NE CORNER THIRD BASE BASEBALL DUGOUT POST	N 2406512.8037	E 2427775.4121
51	THIRD BASE BASEBALL DUGOUT GATE POST	N 2406505.6424	E 2427775.3445
52	THIRD BASE BASEBALL DUGOUT GATE POST	N 2406497.6459	E 2427775.2690
53	CENTER OF SLEEVE	N 2406742.5663	E 2427864.7675
54	CENTER OF SLEEVE	N 2406742.4314	E 2427881.2669
55	CENTER OF SLEEVE	N 2406742.2966	E 2427897.7664
56	CENTER OF SLEEVE	N 2406730.5667	E 2427864.6694
57	CENTER OF SLEEVE	N 2406730.4318	E 2427881.1689
58	CENTER OF SLEEVE	N 2406730.2970	E 2427897.6683
59	CENTER OF SLEEVE	N 2406718.5671	E 2427864.5714
60	CENTER OF SLEEVE	N 2406718.4322	E 2427881.0708
61	CENTER OF SLEEVE	N 2406718.2974	E 2427897.5702
62	CENTER OF SLEEVE	N 2406706.5675	E 2427864.4733
63	CENTER OF SLEEVE	N 2406706.4326	E 2427880.9727
64	CENTER OF SLEEVE	N 2406706.2978	E 2427897.4722
65	CENTER OF SLEEVE	N 2406694.5679	E 2427864.3752
66	CENTER OF SLEEVE	N 2406694.4330	E 2427880.8747
67	CENTER OF SLEEVE	N 2406694.2982	E 2427897.3741
68	CENTER OF SLEEVE	N 2406682.5683	E 2427864.2771
69	CENTER OF SLEEVE	N 2406682.4334	E 2427880.7766
70	CENTER OF SLEEVE	N 2406682.2986	E 2427897.2760
71	CENTER OF SLEEVE	N 2406670.5687	E 2427864.1791
72	CENTER OF SLEEVE	N 2406670.4338	E 2427880.6785
73	CENTER OF SLEEVE	N 2406670.2990	E 2427897.1780

1 LAYOUT PLAN (OVERALL)

SCALE: 1" = 30'-0" @ 22"x34" (FULL SIZE) | 1" = 60'-0" @ 11"x17" (HALF SIZE)

0 30 60 90

NORTH

UNDERGROUND SERVICE ALERT
ONE-CALL NUMBER
811 OR
(800)342-1585
CALL TWO BUSINESS DAYS BEFORE YOU DIG

COPYRIGHT BERNARDO WILLS ARCHITECTS,PC 2013

STATE OF IDAHO
CRAIG R. HATCH
LA-150
09-29-20
LICENSED LANDSCAPE ARCHITECT

100% BID SET
CONSTRUCTION SET
LAYOUT PLAN
OVERALL

153 SOUTH JEFFERSON SPOKANE WASHINGTON 99201 509.838.4511 FAX 509.838.4605 WWW.BERNARDOWILLS.COM

War Memorial Field
Improvements - Phase 2A
Spring Facilities
801 Ontario Street
Sandpoint, Idaho 83864

BERNARDO | WILLS
ARCHITECTS PC

Project No: 19-10-207
Drawn by: JD
Date: 09-29-20

L2.0

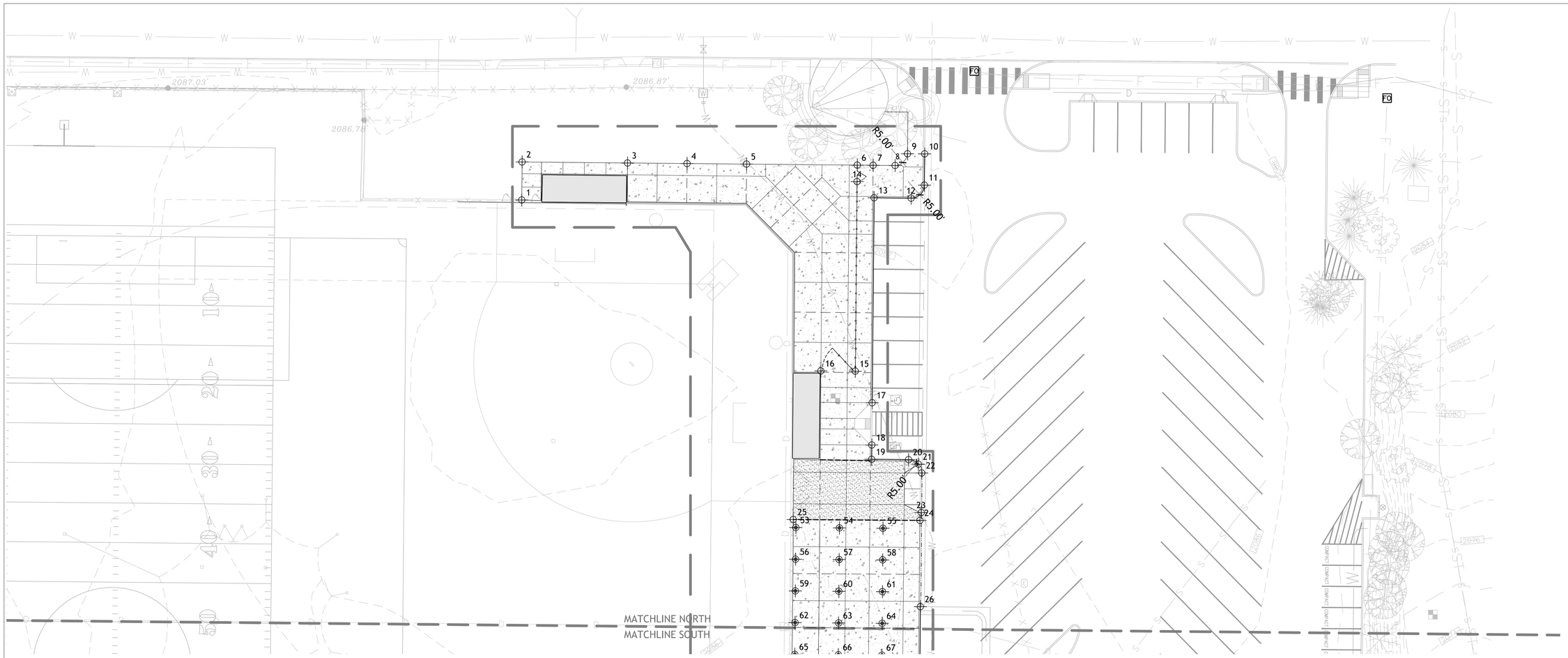

NORTHINGS & EASTINGS POINT SCHEDULE

POINT	DESCRIPTION	NORTHING	EASTING
1	EDGE OF CONCRETE	N 2406866.5951	E 2427760.9447
2	EDGE OF CONCRETE	N 2406880.9746	E 2427761.0804
3	EDGE OF CONCRETE	N 2406880.5979	E 2427801.0001
4	EDGE OF CONCRETE	N 2406880.3851	E 2427823.5559
5	EDGE OF CONCRETE	N 2406880.1723	E 2427846.1099
6	6FT HT. CHAINLINK FENCE END POST	N 2406879.7768	E 2427888.0214
7	EDGE OF CONCRETE	N 2406879.7201	E 2427894.0211
8	EDGE OF CONCRETE/BEGIN RADIUS	N 2406879.6545	E 2427902.3849
9	EDGE OF CONCRETE/END RADIUS	N 2406884.0973	E 2427907.0631
10	EDGE OF CURB	N 2406884.0359	E 2427913.5628
11	EDGE OF CURB/BEGIN RADIUS	N 2406872.2306	E 2427913.4514
12	EDGE OF CURB/END RADIUS	N 2406867.2778	E 2427908.4516
13	EDGE OF CURB	N 2406867.4101	E 2427894.4050
14	6FT HT. CHAINLINK GATE POST	N 2406873.5455	E 2427887.9626
15	6FT HT. CHAINLINK GATE POST	N 2406801.7477	E 2427887.2851
16	6FT HT. CHAINLINK GATE POST	N 2406801.8721	E 2427874.2353
17	EDGE OF CURB	N 2406789.8202	E 2427893.6728
18	EDGE OF CURB	N 2406773.8210	E 2427893.5219
19	EDGE OF CURB	N 2406768.4145	E 2427893.4709
20	EDGE OF CURB/BEGIN RADIUS	N 2406768.2824	E 2427907.4703
21	EDGE OF CURB/BEGIN CURB WITH GUTTER	N 2406766.5776	E 2427911.1839
22	EDGE OF CURB/END RADIUS	N 2406763.2355	E 2427912.4229
23	EDGE OF CURB	N 2406748.2373	E 2427912.2814
24	EDGE OF THICKENED FLATWORK	N 2406745.2767	E 2427911.7823
25	EDGE OF THICKENED FLATWORK	N 2406745.6138	E 2427863.7846
26	EDGE OF CURB/END CURB WITH GUTTER	N 2406712.6048	E 2427911.9452

POINT	DESCRIPTION	NORTHING	EASTING
53	CENTER OF SLEEVE	N 2406742.5663	E 2427864.7675
54	CENTER OF SLEEVE	N 2406742.4314	E 2427881.2669
55	CENTER OF SLEEVE	N 2406742.2966	E 2427897.7664
56	CENTER OF SLEEVE	N 2406730.5667	E 2427864.6694
57	CENTER OF SLEEVE	N 2406730.4318	E 2427881.1689
58	CENTER OF SLEEVE	N 2406730.2970	E 2427897.6683
59	CENTER OF SLEEVE	N 2406718.5671	E 2427864.5714
60	CENTER OF SLEEVE	N 2406718.4322	E 2427881.0708
61	CENTER OF SLEEVE	N 2406718.2974	E 2427897.5702
62	CENTER OF SLEEVE	N 2406706.5675	E 2427864.4733
63	CENTER OF SLEEVE	N 2406706.4326	E 2427880.9727
64	CENTER OF SLEEVE	N 2406706.2978	E 2427897.4722
65	CENTER OF SLEEVE	N 2406694.5679	E 2427864.3752
66	CENTER OF SLEEVE	N 2406694.4330	E 2427880.8747
67	CENTER OF SLEEVE	N 2406694.2982	E 2427897.3741

LAYOUT NOTES

1. CONTRACTOR TO VERIFY LOCATION OF ALL UTILITIES PRIOR TO INITIATION OF ANY DEMOLITION OR CONSTRUCTION OPERATIONS. ANY DAMAGE TO EXISTING UTILITIES ON SITE OR ADJACENT PROPERTY SHALL BE CONTRACTOR'S RESPONSIBILITY TO CORRECT.
2. CONSTRUCTION STAKING SHALL BE PERFORMED BY A STATE OF IDAHO REGISTERED LAND SURVEYOR.
3. ALL DIMENSIONS ARE TO FACE OF CURB, EDGE OF WALK, EDGE OF PAVEMENT, FACE OF BUILDING, OR FACE OF WALLS UNLESS OTHERWISE NOTED.
4. CONTRACTOR SHALL REFER TO SPECIFICATIONS FOR ADDITIONAL REQUIREMENTS.
5. LAYOUT PROJECT AS DESIGNED. CONTRACTOR SHALL REMOVE WORK THAT DOES NOT CONFORM TO DRAWINGS AND SPECIFICATIONS.
6. IN THE EVENT OF A DISCREPANCY, IMMEDIATELY NOTIFY LANDSCAPE ARCHITECT.
7. REFER CLOSELY TO LAYOUT DRAWINGS IN RELATION TO SITE LAYOUT ITEMS. CONTRACTOR TO VERIFY LISTED DIMENSIONS PRIOR TO CONSTRUCTION.
8. COORDINATE INSTALLATION OF ELECTRICAL AND IRRIGATION CONDUIT AND SLEEVES WITH RESPECTIVE CONTRACTORS.
9. REFER TO MATERIALS AND CIVIL PLANS TO AID IN PROJECT LAYOUT.
10. CONTRACTOR TO VERIFY LOCATIONS OF ALL FOOTING LOCATIONS FOR FENCE/GATE POSTS, DUGOUT POSTS, AND BATTING CAGE EMBEDDED GROUND SLEEVES PRIOR TO CONSTRUCTION.

1 LAYOUT PLAN (NORTH)

SCALE: 1" = 20'-0" @ 22"x34" (FULL SIZE) | 1" = 40'-0" @ 11"x17" (HALF SIZE)

0 20 40 60

NORTH

UNDERGROUND SERVICE ALERT
ONE-CALL NUMBER
811 OR
(800)342-1585
CALL TWO BUSINESS DAYS BEFORE YOU DIG

COPYRIGHT BERNARDO WILLS ARCHITECTS,PC 2013

STATE OF IDAHO
DANIEL R HAGEN
LICENSED LANDSCAPE ARCHITECT
LA-150
09-29-20

153 SOUTH JEFFERSON SPOKANE WASHINGTON 99201 509.838.4511 FAX 509.838.4605 WWW.BERNARDOWILLS.COM

100% BID SET
CONSTRUCTION SET
LAYOUT PLAN
NORTH

War Memorial Field Improvements - Phase 2A Spring Facilities

801 Ontario Street
Sandpoint, Idaho 83864

BWA BERNARDO | WILLS ARCHITECTS PC

Project No: 19-10-207
Drawn by: JD
Date: 09-29-20

L2.1

NORTHINGS & EASTINGS POINT SCHEDULE

POINT	DESCRIPTION	NORTHING	EASTING	POINT	DESCRIPTION	NORTHING	EASTING
27	EDGE OF CURB	N 2406665.5420	E 2427911.5011	51	THIRD BASE BASEBALL DUGOUT GATE POST	N 2406505.6424	E 2427775.3445
28	EDGE OF CURB	N 2406649.5427	E 2427911.3502	52	THIRD BASE BASEBALL DUGOUT GATE POST	N 2406497.6459	E 2427775.2690
29	EDGE OF CURB/BEGIN RADIUS	N 2406645.2828	E 2427911.3100	53	CENTER OF SLEEVE	N 2406742.5663	E 2427864.7675
30	EDGE OF CURB/END RADIUS	N 2406640.3302	E 2427906.2630	54	CENTER OF SLEEVE	N 2406742.4314	E 2427881.2669
31	EDGE OF CURB	N 2406640.4623	E 2427892.2636	55	CENTER OF SLEEVE	N 2406742.2966	E 2427897.7664
32	EDGE OF CURB	N 2406635.0434	E 2427892.2125	56	CENTER OF SLEEVE	N 2406730.5667	E 2427864.6694
33	EDGE OF CURB	N 2406619.0445	E 2427892.0216	57	CENTER OF SLEEVE	N 2406730.4318	E 2427881.1689
34	END OF CURB/END OF CONCRETE	N 2406596.4642	E 2427891.8485	58	CENTER OF SLEEVE	N 2406730.2970	E 2427897.6683
35	END OF CONCRETE/START OF WALL	N 2406596.5444	E 2427883.3489	59	CENTER OF SLEEVE	N 2406718.5671	E 2427864.5714
36	6FT HT. CHAINLINK GATE POST	N 2406597.6614	E 2427882.0293	60	CENTER OF SLEEVE	N 2406718.4322	E 2427881.0708
37	6FT HT. CHAINLINK GATE POST	N 2406597.7746	E 2427870.0299	61	CENTER OF SLEEVE	N 2406718.2974	E 2427897.5702
38	SE CORNER FIRST BASE BASEBALL DUGOUT POST	N 2406597.7829	E 2427869.1490	62	CENTER OF SLEEVE	N 2406706.5675	E 2427864.4733
39	SW CORNER FIRST BASE BASEBALL DUGOUT POST	N 2406597.8507	E 2427861.9842	63	CENTER OF SLEEVE	N 2406706.4326	E 2427880.9727
40	NW CORNER FIRST BASE BASEBALL DUGOUT POST	N 2406633.6164	E 2427862.3245	64	CENTER OF SLEEVE	N 2406706.2978	E 2427897.4722
41	NE CORNER FIRST BASE BASEBALL DUGOUT POST	N 2406633.5487	E 2427869.4873	65	CENTER OF SLEEVE	N 2406694.5679	E 2427864.3752
42	EDGE OF CONCRETE WALL	N 2406524.3293	E 2427882.6675	66	CENTER OF SLEEVE	N 2406694.4330	E 2427880.8747
43	EDGE OF CONCRETE WALL	N 2406490.4050	E 2427848.0969	67	CENTER OF SLEEVE	N 2406694.2982	E 2427897.3741
44	END OF CONCRETE WALL	N 2406491.0865	E 2427776.2072	68	CENTER OF SLEEVE	N 2406682.5683	E 2427864.2771
45	SE CORNER THIRD BASE BASEBALL DUGOUT POST	N 2406491.5652	E 2427775.2117	69	CENTER OF SLEEVE	N 2406682.4334	E 2427880.7766
46	SW CORNER THIRD BASE BASEBALL DUGOUT POST	N 2406491.9066	E 2427739.0293	70	CENTER OF SLEEVE	N 2406682.2986	E 2427897.2760
47	SW CORNER THIRD BASE BASEBALL OPEN STORAGE POST	N 2406492.0417	E 2427724.7117	71	CENTER OF SLEEVE	N 2406670.5687	E 2427864.1791
48	EXISTING POST	N 2406513.2720	E 2427724.9120	72	CENTER OF SLEEVE	N 2406670.4338	E 2427880.6785
49	NW CORNER THIRD BASE BASEBALL DUGOUT POST	N 2406513.1473	E 2427739.2298	73	CENTER OF SLEEVE	N 2406670.2990	E 2427897.1780
50	NE CORNER THIRD BASE BASEBALL DUGOUT POST	N 2406512.8037	E 2427775.4121				

LAYOUT NOTES

1. CONTRACTOR TO VERIFY LOCATION OF ALL UTILITIES PRIOR TO INITIATION OF ANY DEMOLITION OR CONSTRUCTION OPERATIONS. ANY DAMAGE TO EXISTING UTILITIES ON SITE OR ADJACENT PROPERTY SHALL BE CONTRACTOR'S RESPONSIBILITY TO CORRECT.
2. CONSTRUCTION STAKING SHALL BE PERFORMED BY A STATE OF IDAHO REGISTERED LAND SURVEYOR.
3. ALL DIMENSIONS ARE TO FACE OF CURB, EDGE OF WALK, EDGE OF PAVEMENT, FACE OF BUILDING, OR FACE OF WALLS UNLESS OTHERWISE NOTED.
4. CONTRACTOR SHALL REFER TO SPECIFICATIONS FOR ADDITIONAL REQUIREMENTS.
5. LAYOUT PROJECT AS DESIGNED. CONTRACTOR SHALL REMOVE WORK THAT DOES NOT CONFORM TO DRAWINGS AND SPECIFICATIONS.
6. IN THE EVENT OF A DISCREPANCY, IMMEDIATELY NOTIFY LANDSCAPE ARCHITECT.
7. REFER CLOSELY TO LAYOUT DRAWINGS IN RELATION TO SITE LAYOUT ITEMS. CONTRACTOR TO VERIFY LISTED DIMENSIONS PRIOR TO CONSTRUCTION.
8. COORDINATE INSTALLATION OF ELECTRICAL AND IRRIGATION CONDUIT AND SLEEVES WITH RESPECTIVE CONTRACTORS.
9. REFER TO MATERIALS AND CIVIL PLANS TO AID IN PROJECT LAYOUT.
10. CONTRACTOR TO VERIFY LOCATIONS OF ALL FOOTING LOCATIONS FOR FENCE/GATE POSTS, DUGOUT POSTS, AND BATTING CAGE EMBEDDED GROUND SLEEVES PRIOR TO CONSTRUCTION.

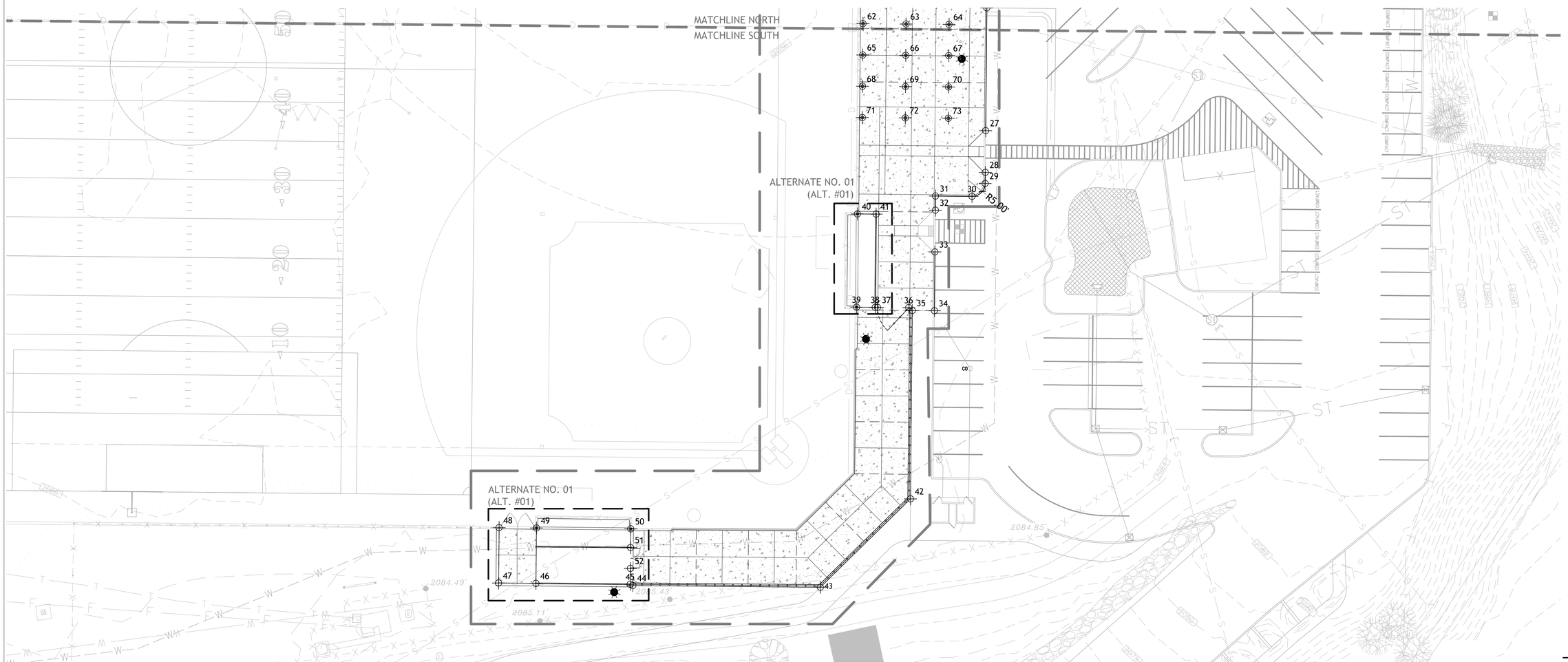

1 LAYOUT PLAN (SOUTH)

SCALE: 1" = 20'-0" @ 22"x34" (FULL SIZE) | 1" = 40'-0" @ 11"x17" (HALF SIZE)

NORTH

UNDERGROUND SERVICE ALERT
ONE-CALL NUMBER
811 OR
(800)342-1585
CALL TWO BUSINESS DAYS BEFORE YOU DIG

COPYRIGHT BERNARDO WILLS ARCHITECTS,PC 2013

STATE OF IDAHO
JOELL R HAYDEN
LA-150
09-29-20
LICENSED LANDSCAPE ARCHITECT

153 SOUTH JEFFERSON SPOKANE WASHINGTON 99201 509.838.4511 FAX 509.838.4605 WWW.BERNARDOWILLS.COM

BERNARDO | WILLS
ARCHITECTS PC

100% BID SET
CONSTRUCTION SET
LAYOUT PLAN
SOUTH

War Memorial Field
Improvements - Phase 2A
Spring Facilities
801 Ontario Street
Sandpoint, Idaho 83864

Project No: 19-10-207
Drawn by: JD
Date: 09-29-20

L2.2

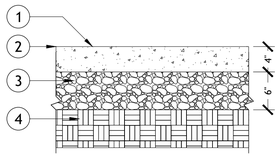

1. CONCRETE SURFACING AS SPECIFIED
2. FINISH GRADE
3. (6") MINIMUM COMPACTED 5/8" - MINUS CRUSHED AGGREGATE BASE COURSE
4. COMPACTED SUBGRADE

NOTES:
1. CONCRETE FINISH, COLOR, TEXTURE, AND MIX AS SPECIFIED.

01 (4") STANDARD CONCRETE FLATWORK

1" = 1'-0"

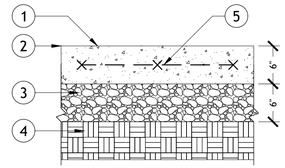

1. CONCRETE SURFACING AS SPECIFIED
2. FINISH GRADE
3. (6") MINIMUM COMPACTED 5/8" - MINUS CRUSHED AGGREGATE BASE COURSE
4. COMPACTED SUBGRADE
5. #4 REBAR CONTINUOUS (12") O.C.E.W. CENTERED VERTICALLY IN SLAB

NOTES:
1. CONCRETE FINISH, COLOR, TEXTURE, AND MIX AS SPECIFIED.

02 (6") THICKENED CONCRETE FLATWORK

1" = 1'-0"

1. REINFORCED THICKENED EDGE CONCRETE FLATWORK, #4 REBAR 12" O.C.E.W. SEE LAYOUT & MATERIAL PLANS FOR DIMENSIONS AND LAYOUT.
2. 6" DOWEL JOINT w/ GREASE SLEEVE & EXPANSION JOINT FILLER MATERIAL
3. (4") CONCRETE FLATWORK (SEE DETAIL #01/SHEET L6.0)
4. (6") MINIMUM COMPACTED 5/8" - MINUS CRUSHED AGGREGATE BASE COURSE
5. UNDISTURBED EARTH OR COMPACTED SUBGRADE

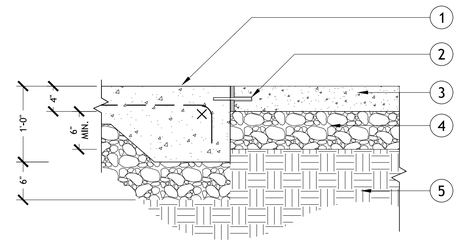

03 THICKENED EDGE CONCRETE W/ DOWEL JOINT

1" = 1'-0"

1. TOOLED EDGE WITH GROOVER/JOINTER
2. 4" FLAT TOOLED AREA CENTERED ON CONTROL JOINT
3. COMPACTED 5/8" - MINUS AGGREGATE BASE
4. CONCRETE PER PLANS/SPECIFICATIONS

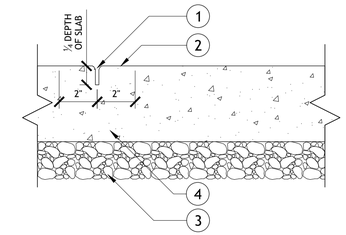

NOTES:
1. SPACE CONTROL JOINTS PER PLANS/SPECIFICATIONS.
2. CONCRETE FINISH, COLOR, TEXTURE, AND MIX AS SPECIFIED/PER PLAN.

04 CONCRETE CONTROL JOINT

3" = 1'-0"

1. EXPANSION JOINT FILLER MATERIAL AND SEALER
2. 4" FLAT TOOLED AREA CENTERED ON EXPANSION JOINT
3. COMPACTED 5/8" - MINUS AGGREGATE BASE
4. CONCRETE PER PLANS/SPECIFICATIONS

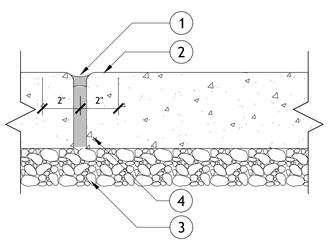

NOTES:
1. SPACE EXPANSION JOINTS PER PLANS/SPECIFICATIONS.
2. CONCRETE FINISH, COLOR, TEXTURE, AND MIX AS SPECIFIED.

05 CONCRETE EXPANSION JOINT

3" = 1'-0"

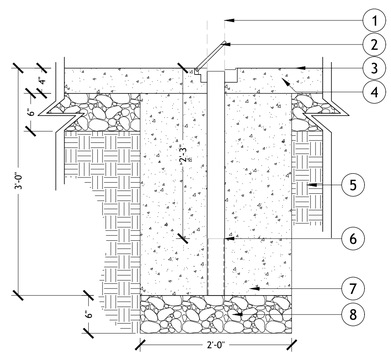

1. BATTING CAGE POST, TYP.
2. CONCRETE EMBEDDED GROUND SLEEVE FOR BATTING CAGE POSTS w/ HINGED ALUMINUM CAP. SEE SPECIFICATIONS FOR ADDITIONAL INFO
3. FINISH GRADE
4. CONCRETE PER PLANS/SPECIFICATIONS
5. UNDISTURBED EARTH OR COMPACTED SUBGRADE
6. END OF MANUFACTURED GROUND SLEEVE UNIT (27" DEEP). EXTEND w/ SECONDARY PIPE TO REACH REQUIRED FOOTING DEPTH & ALLOW WATER TO DRAIN TO AGGREGATE
7. CONCRETE FOOTING
8. (6") MINIMUM COMPACTED 5/8" - MINUS AGGREGATE BASE

NOTES:
1. INSTALL EMBEDDED GROUND SLEEVES PER MANUFACTURER'S SPECIFICATIONS.
2. CROWN CONCRETE SLIGHTLY AROUND CAP TO ALLOW WATER TO DRAIN AWAY FROM SLEEVE.
3. CENTER SLEEVE IN HOLE. MAKE CERTAIN BOTTOM OF SLEEVE IS IN CONTACT WITH GRAVEL SO THAT BOTTOM OF SLEEVE WILL NOT BE PLUGGED WITH CONCRETE. ADD ADDITIONAL GRAVEL IF NECESSARY TO SLEEVE LOCATION TO ENSURE CORRECT HEIGHT.
4. TOP OF HINGED CAP SHALL BE FLUSH WITH TOP OF CONCRETE/FINISH GRADE WHEN CLOSED.

06 CONCRETE EMBEDDED GROUND SLEEVE W/ CAP

1" = 1'-0"

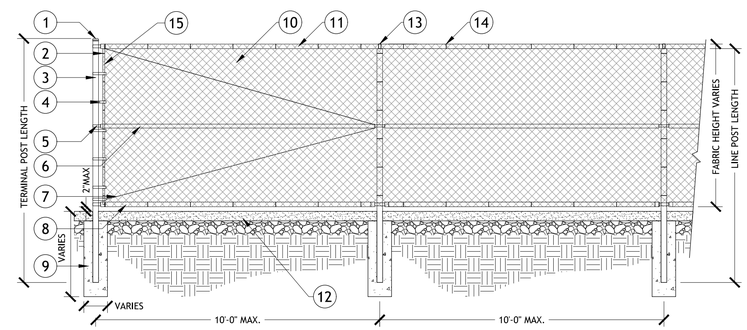

1. DOME POST CAP
2. POST TIES 12" O.C.
3. SCH. 40 TERMINAL POST, SIZE AS SPECIFIED
4. TENSION BAND 12" O.C.
5. BRACE BAND
6. SCH. 40 BRACE RAIL, SIZE AS SPECIFIED
7. TRUSS ROD ADJUSTING UNIT AND TRUSS ROD AS REQUIRED
8. SCH. 40 BOTTOM RAIL w/ RAIL TIES AT 18" O.C., SIZE AS SPECIFIED
9. CONCRETE FOOTING. DIAMETER (4x) POST DIAMETER, MINIMUM 3FT. DEEP, DEPTH AS SPECIFIED
10. CHAIN LINK FABRIC 9 GAUGE, 2" MESH PER SPECIFICATIONS. TOP AND BOTTOM KNUCKLE SELVAGE
11. SCH. 40 TOP RAIL w/ RAIL TIES AT 18" O.C., SIZE AS SPECIFIED
12. 4" CONCRETE SLAB WITH 6" COMPACTED AGGREGATE BASE
13. LINE POST LOOP TOP, TYP.
14. RAIL TIE 18" O.C.
15. TENSION BAR

07 STANDARD CHAINLINK FENCE w/ TOP & BOTTOM RAIL

3/8" = 1'-0"

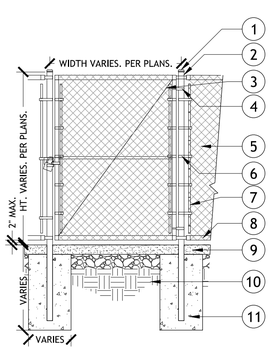

1. DOME POST CAP
2. SCH. 40 TERMINAL POST, SIZE AS SPECIFIED
3. TRUSS RODS, TYP. SIZE AS REQUIRED
4. GATE HINGES, TYP.
5. CHAIN LINK FABRIC 9 GAUGE, 2" MESH PER SPECIFICATIONS. TOP AND BOTTOM KNUCKLE SELVAGE
6. TENSION BAND 12" O.C.
7. TENSION BAR
8. SCH. 40 TOP & BOTTOM RAIL, SIZE AS SPECIFIED
9. 4" CONCRETE SLAB WITH 6" COMPACTED AGGREGATE BASE
10. UNDISTURBED SUBGRADE, TYP.
11. CONCRETE FOOTING, DIAMETER (4x) POST DIAMETER, MINIMUM 3FT. DEEP, DEPTH AS SPECIFIED

08 STANDARD SINGLE SWING CHAINLINK GATE

3/8" = 1'-0"

COPYRIGHT BERNARDO WILLS ARCHITECTS,PC 2013

STATE OF IDAHO
CRAIG R HAGEN
LICENSED LANDSCAPE ARCHITECT
LA-150
09-29-20

153 SOUTH JEFFERSON SPOKANE WASHINGTON 99201 509.838.4511 FAX 509.838.4605 WWW.BERNARDOWILLS.COM

100% BID SET
CONSTRUCTION SET
LANDSCAPE
SITE DETAILS

War Memorial Field
Improvements - Phase 2A
Spring Facilities
801 Ontario Street
Sandpoint, Idaho 83864

B W A BERNARDO | WILLS ARCHITECTS PC

Project No: 19-10-207
Drawn by:
Date: 09-29-20

L6.0

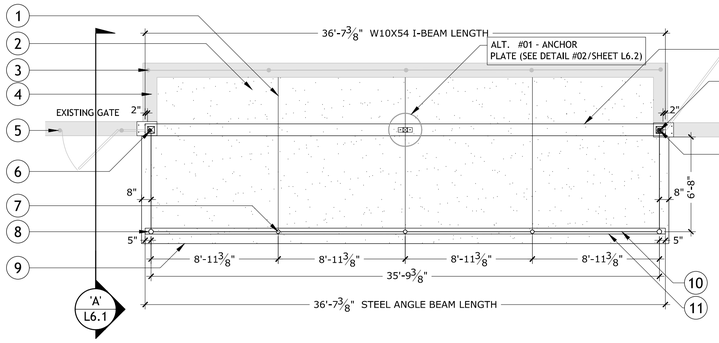

1. CONCRETE CONTROL JOINT, TYP. (SEE DETAIL #04/SHEET L6.0)
2. (4") THICK CONCRETE FLATWORK OVER (4") MINIMUM 5/8" - MINUS COMPACTED AGGREGATE BASE (SEE DETAIL #01/SHEET L6.0)
3. EXISTING (3") DIAMETER POST, TYP (5)
4. EXISTING CONCRETE SYNTHETIC TURF NAILER EDGE (PHASE I)
5. EXISTING (3") DIAMETER POST, TYP (2)
6. EXISTING (3") DIAMETER POST TO BE CUT FLUSH AT CONCRETE. NEW SQUARE TUBE STEEL POST TO BE INSTALLED AT THIS LOCATION, TYP. BOTH SIDES OF DUGOUT (SEE NOTE #01 BELOW)
7. (3") DIAMETER LINE POSTS, TYP. (3)
8. (4") DIAMETER END POST, TYP. (2)
9. EDGE OF CONCRETE FLATWORK
10. GALVANIZED CHAINLINK FENCE RAILINGS & FABRIC AS SPECIFIED. (SEE DETAIL #07.L6.0) FOR ADDITIONAL INFORMATION
11. STEEL ANGLE BEAM - 6" HORZ. X 6" VERT. X 3/16". BOLT TO POSTS. POWDER COAT, COLOR SHALL BE TEXTURED MATTE BLACK FINISH
12. WIDE FLANGE STEEL I-BEAM W10X54. POWDER COAT, COLOR SHALL BE MATTE BLACK TEXTURED FINISH
13. EXISTING (4") DIAMETER POST

NOTES:
1. ROOF STRUCTURE SUPPORT COLUMN FOR WIDE FLANGE I-BEAM (TYP. BOTH SIDES OF DUGOUT). 6"x6"x ¼" TUBE STEEL POST WELDED TO 12"x17"x ¾" ANCHOR PLATE. SECURE TO CONCRETE WITH (4) 316 STAINLESS STEEL ½" DIA. x 6" CONCRETE WEDGE ANCHORS SET w/ EPOXY. PLACE ANCHOR PLATES TO MATCH EXISTING CONCRETE CORNER EDGES AS SHOWN. ACTUAL LOCATION OF TUBE STEEL ON ANCHOR PLATE WILL VARY AT EACH LOCATION BASED ON AS-BUILT FIELD CONDITIONS. TUBE STEEL POSTS AND ANCHOR PLATES SHALL BE POWDER COATED, MATTE BLACK TEXTURED FINISH, SUBMIT COLOR SAMPLE TO LANDSCAPE ARCHITECT FOR APPROVAL.
2. USE SQUARE POST CHAIN LINK RAIL AND GATE HARDWARE AT SQUARE TUBES.

01 BASE BID - FIRST BASE CHAINLINK BASEBALL DUGOUT (PLAN)

3/16" = 1'-0"

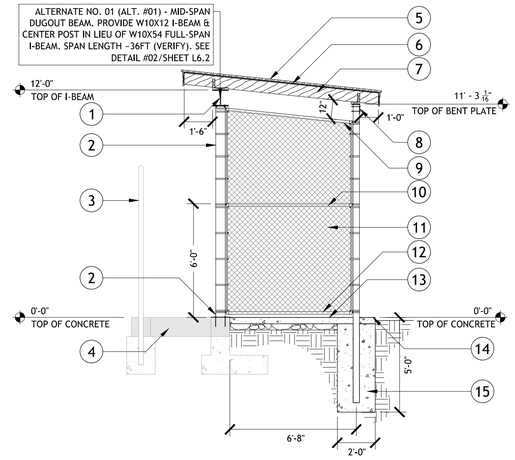

1. WIDE FLANGE STEEL I-BEAM W10X54. POWDER COAT, COLOR SHALL BE MATTE BLACK TEXTURED FINISH (SEE DETAIL #03/SHEET L6.1)
2. NEW SQUARE TUBE STEEL POST TO BE INSTALLED AT THIS LOCATION, TYP. BOTH SIDES OF DUGOUT (SEE NOTE #01 BELOW)
3. EXISTING DUGOUT FENCE (PHASE I)
4. EXISTING CONCRETE SYNTHETIC TURF NAILER EDGE (PHASE I)
5. STANDING SEAM METAL ROOFING - METAL SALES 29-GAUGE "CLASSIC RIB" 3FT. WIDE. COLOR SHALL BE BLACK
6. 5/8" CDX PLYWOOD SHEATHING TOPPED w/ 30LB. ROOFING FELT
7. 2" x 8" ROOF RAFTERS (16") O.C.
8. STEEL ANGLE BEAM - 6" HORZ. X 6" VERT. X 3/16". BOLT TO POSTS. POWDER COAT, COLOR SHALL BE TEXTURED MATTE BLACK FINISH (SEE DETAIL #05/SHEET L6.1)
9. TOP RAIL
10. MIDDLE RAIL
11. GALVANIZED CHAINLINK FENCE RAILINGS & FABRIC AS SPECIFIED. (SEE DETAIL #07.L6.0) FOR ADDITIONAL INFORMATION
12. BOTTOM RAIL
13. (4") THICK CONCRETE FLATWORK OVER (4") MINIMUM 5/8" - MINUS COMPACTED AGGREGATE BASE (SEE DETAIL #01/SHEET L6.0)
14. EDGE OF CONCRETE FLATWORK
15. CONCRETE FOOTING

NOTES:
1. ROOF STRUCTURE SUPPORT COLUMN FOR WIDE FLANGE I-BEAM (TYP. BOTH SIDES OF DUGOUT). 6"x6"x ¼" TUBE STEEL POST WELDED TO 12"x17"x ¾" ANCHOR PLATE. SECURE TO CONCRETE WITH (4) 316 STAINLESS STEEL ½" DIA. x 6" CONCRETE WEDGE ANCHORS SET w/ EPOXY. PLACE ANCHOR PLATES TO MATCH EXISTING CONCRETE CORNER EDGES AS SHOWN. ACTUAL LOCATION OF TUBE STEEL ON ANCHOR PLATE MUST BE DETERMINED WITH FIELD VERIFIED MEASUREMENTS. LOCATION OF TUBE STEEL ON ANCHOR PLATE WILL VARY AT EACH LOCATION BASED ON AS-BUILT FIELD CONDITIONS. TUBE STEEL POSTS AND ANCHOR PLATES SHALL BE POWDER COATED, MATTE BLACK TEXTURED FINISH, SUBMIT COLOR SAMPLE TO LANDSCAPE ARCHITECT FOR APPROVAL.
2. USE SQUARE POST CHAIN LINK RAIL AND GATE HARDWARE AT SQUARE TUBES.

02 BASE BID - FIRST BASE CHAINLINK BASEBALL DUGOUT (ELEVATION 'A')

1/4" = 1'-0"

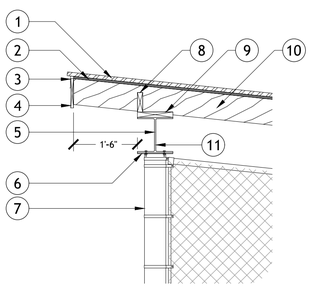

1. STANDING SEAM METAL ROOFING - METAL SALES 29-GAUGE "CLASSIC RIB" 3FT. WIDE. COLOR SHALL BE BLACK
2. 5/8" CDX PLYWOOD SHEATHING TOPPED w/ 30LB. ROOFING FELT
3. METAL DRIP EDGE. COLOR SHALL BE BLACK
4. 1" x 8 1/4" WIDE COMPOSITE EXTERIOR WOOD FASCIA. PAINTED FINISH, COLOR SHALL BE FLAT BLACK
5. W10X54 STEEL I-BEAM, POWDER COAT, COLOR SHALL BE TEXTURED MATTE BLACK FINISH. ATTACH TO TOP COLUMN PLATE w/ (4) 316 STAINLESS STEEL 3/4" DIAMETER MACHINE BOLTS w/ NUT & WASHERS
6. 10" x 10" x 1/2" STEEL PLATE WELDED TO TOP OF COLUMN w/ 3/16" CONTINUOUS FILLET WELD ALL SIDES. POWDER COAT, COLOR SHALL BE TEXTURED MATTE BLACK FINISH
7. 6" x 6" x 1/4" TUBE STEEL POST. POWDER COAT, COLOR SHALL BE TEXTURED MATTE BLACK FINISH
8. 2" x 6" WOOD BLOCKING
9. 2" x 12" WOOD NAILER RIPPED DOWN TO 10". ATTACH TO I-BEAM w/ 316 STAINLESS STEEL MACHINE BOLTS w/ NUTS & WASHERS 1/2" x 3" AT 18" O.C.
10. 2" x 8" ROOF RAFTERS (16") O.C.
11. ALTERNATE NO. 01 (ALT. #01) - PROVIDE A W10X12 MID-SPAN BEAM IN LIEU OF THE BASE BID FULL-SPAN W10X54 BEAM. SPAN LENGTH APPROXIMATELY 36FT. (CONTRACTOR TO FIELD VERIFY). SEE DETAIL #02/SHEET L6.2

NOTES:
1. SEE CALLOUT #11 FOR ALTERNATE NO. 01 (ALT. #01) INFORMATION.
2. SUBMIT COLOR SAMPLE(S) TO LANDSCAPE ARCHITECT FOR APPROVAL.

03 STEEL I-BEAM DETAIL

3/8" = 1'-0"

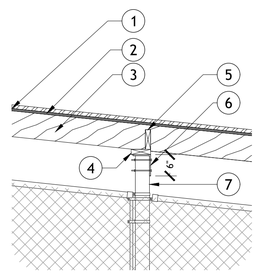

1. STANDING SEAM METAL ROOFING - METAL SALES 29-GAUGE "CLASSIC RIB" 3FT. WIDE. COLOR SHALL BE BLACK
2. 5/8" CDX PLYWOOD SHEATHING TOPPED w/ 30LB. ROOFING FELT
3. 2" x 8" ROOF RAFTERS (16") O.C.
4. 2" x 6" WOOD NAILER. ATTACH TO STEEL ANGLE BEAM w/ 316 STAINLESS STEEL MACHINE BOLTS w/ NUTS & WASHERS 1/2" x 3" AT 18" O.C.
5. 2" x 6" WOOD BLOCKING
6. STEEL ANGLE BEAM - 6" HORZ. X 6" VERT. X 3/16". BOLT TO POST w/ 316 STAINLESS STEEL MACHINE BOLTS w/ NUTS & WASHERS 2" x 5-1/2", (2) PER PLATE. POWDER COAT, COLOR SHALL BE TEXTURED MATTE BLACK FINISH
7. (4") GALVANIZED FENCE POST

NOTES:
1. SUBMIT COLOR SAMPLE(S) TO LANDSCAPE ARCHITECT FOR APPROVAL.

04 STEEL ANGLE BEAM DETAIL (CENTER)

3/8" = 1'-0"

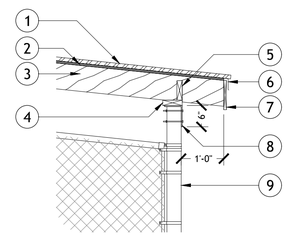

1. STANDING SEAM METAL ROOFING - METAL SALES 29-GAUGE "CLASSIC RIB" 3FT. WIDE. COLOR SHALL BE BLACK
2. 5/8" CDX PLYWOOD SHEATHING TOPPED w/ 30LB. ROOFING FELT
3. 2" x 8" ROOF RAFTERS (16") O.C.
4. 2" x 6" WOOD NAILER. ATTACH TO STEEL ANGLE BEAM w/ 316 STAINLESS STEEL MACHINE BOLTS w/ NUTS & WASHERS 1/2" x 3" AT 18" O.C.
5. 2" x 6" WOOD BLOCKING
6. METAL DRIP EDGE. COLOR SHALL BE BLACK
7. 1" x 8 1/4" WIDE COMPOSITE EXTERIOR WOOD FASCIA. PAINTED FINISH, COLOR SHALL BE FLAT BLACK
8. STEEL ANGLE BEAM - 6" HORZ. X 6" VERT. X 3/16". BOLT TO POST w/ 316 STAINLESS STEEL MACHINE BOLTS w/ NUTS & WASHERS 1/2" x 5-1/2", (2) PER PLATE. POWDER COAT, COLOR SHALL BE TEXTURED MATTE BLACK FINISH
9. (4") GALVANIZED FENCE POST

NOTES:
1. SUBMIT COLOR SAMPLE(S) TO LANDSCAPE ARCHITECT FOR APPROVAL.

05 STEEL ANGLE BEAM DETAIL (END)

3/8" = 1'-0"

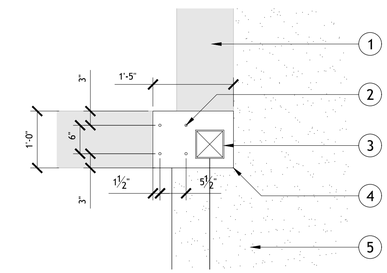

1. EXISTING CONCRETE SYNTHETIC TURF NAILER EDGE (PHASE I)
2. (4) 316 STAINLESS STEEL 1/2" DIA. x 6" CONCRETE WEDGE ANCHORS SET w/ EPOXY
3. 6" x 6" x 1/4" TUBE STEEL WELDED TO ANCHOR PLATE w/ 3/16" FILLET WELD CONTINUOUS ALL SIDES. (NOTE: ACTUAL LOCATION OF TUBE ON ANCHOR PLATE MUST BE DETERMINED BY AS-BUILT FIELD MEASUREMENTS)
4. 1/2" THICK STEEL ANCHOR PLATE. FIT CORNER TO MATCH EXISTING CONCRETE EDGE CORNER. POWDER COAT, COLOR SHALL BE TEXTURED MATTE BLACK FINISH
5. (4") THICK CONCRETE FLATWORK

06 ANCHOR PLATE DETAIL (PLAN)

3/4" = 1'-0"

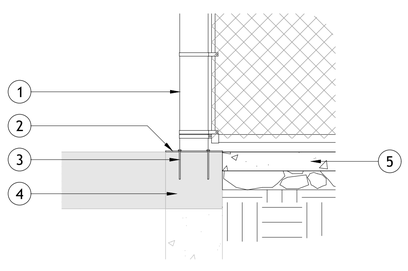

1. 6" x 6" x 1/4" TUBE STEEL WELDED TO ANCHOR PLATE w/ 3/16" FILLET WELD CONTINUOUS ALL SIDES. (NOTE: ACTUAL LOCATION OF TUBE ON ANCHOR PLATE MUST BE DETERMINED BY AS-BUILT FIELD MEASUREMENTS)
2. 1/2" THICK STEEL ANCHOR PLATE. FIT CORNER TO MATCH EXISTING CONCRETE EDGE CORNER. POWDER COAT, COLOR SHALL BE TEXTURED MATTE BLACK FINISH
3. (4) 316 STAINLESS STEEL 1/2" DIA. x 6" CONCRETE WEDGE ANCHORS SET w/ EPOXY
4. EXISTING CONCRETE SYNTHETIC TURF NAILER EDGE (PHASE I)
5. (4") THICK CONCRETE FLATWORK

07 ANCHOR PLATE DETAIL (SECTION)

3/4" = 1'-0"

COPYRIGHT BERNARDO WILLS ARCHITECTS,PC 2013

STATE OF IDAHO
LA-150
09-29-20
LICENSED LANDSCAPE ARCHITECT

153 SOUTH JEFFERSON SPOKANE WASHINGTON 99201 509.838.4511 FAX 509.838.4605 WWW.BERNARDOWILLS.COM

100% BID SET
CONSTRUCTION SET
LANDSCAPE
SITE DETAILS

War Memorial Field Improvements - Phase 2A Spring Facilities

801 Ontario Street
Sandpoint, Idaho 83864

BWA BERNARDO | WILLS ARCHITECTS PC

Project No: 19-10-207
Drawn by:
Date: 09-29-20

L6.1

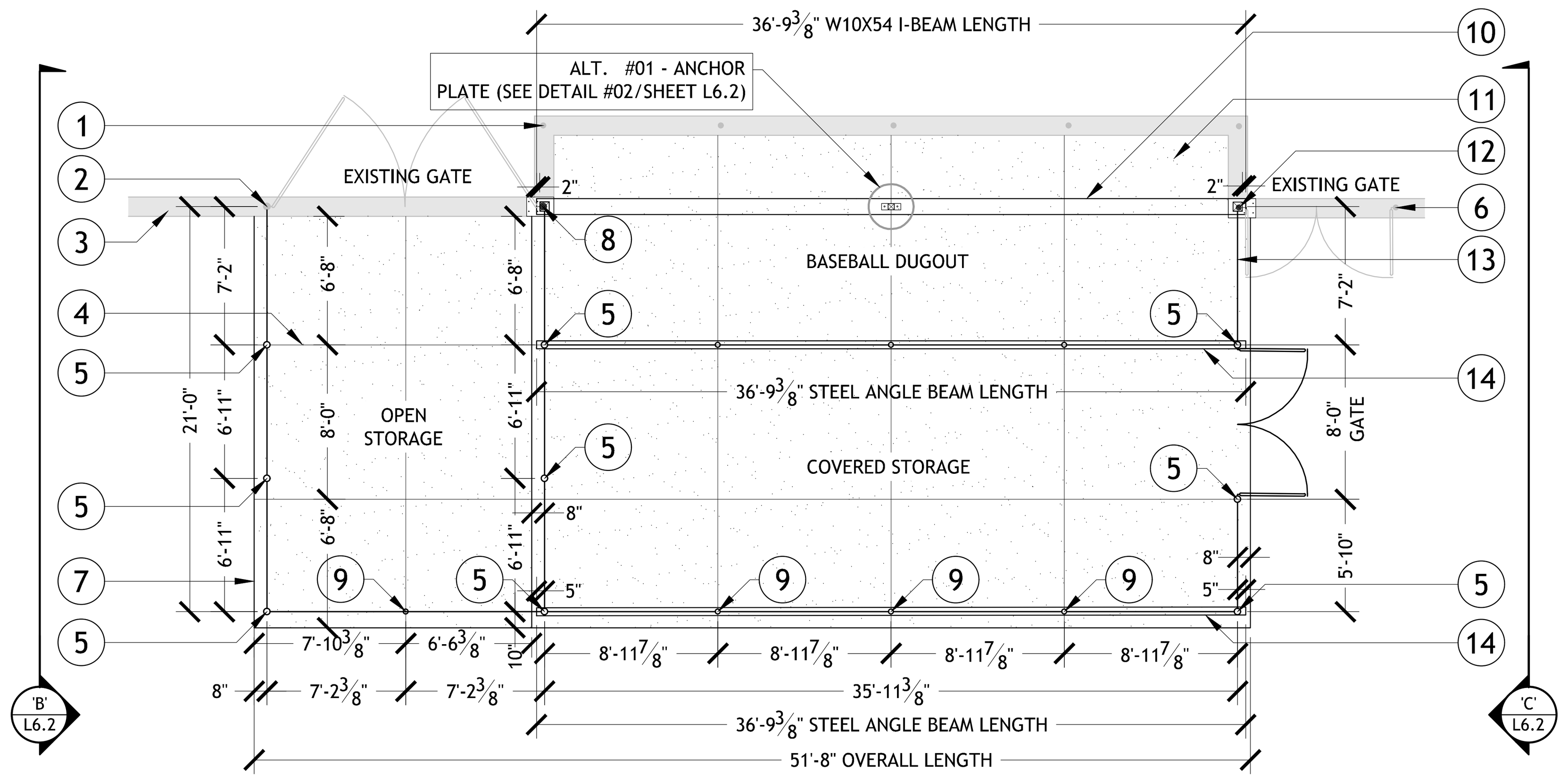

1. EXISTING (3") DIAMETER POST, TYP (5)
2. EXISTING (4") DIAMETER POST
3. EXISTING CONCRETE SYNTHETIC TURF NAILER EDGE (PHASE I)
4. CONCRETE CONTROL JOINT, TYP. (SEE DETAIL #04/SHEET L6.0)
5. (4") DIAMETER POST
6. EXISTING (3") DIAMETER POST
7. EDGE OF CONCRETE FLATWORK
8. EXISTING (4") DIAMETER POST TO BE CUT FLUSH AT CONCRETE. NEW SQUARE TUBE STEEL POST TO BE INSTALLED AT THIS LOCATION, TYP. BOTH SIDES OF DUGOUT (SEE NOTE #01 BELOW)
9. (3") DIAMETER LINE POSTS
10. WIDE FLANGE STEEL I-BEAM W10X54. POWDER COAT, COLOR SHALL BE MATTE BLACK TEXTURED FINISH
11. (4") THICK CONCRETE FLATWORK OVER (4") MINIMUM 5/8" - MINUS COMPACTED AGGREGATE BASE (SEE DETAIL #01/SHEET L6.0)
12. EXISTING (3") DIAMETER POST TO BE CUT FLUSH AT CONCRETE. NEW SQUARE TUBE STEEL POST TO BE INSTALLED AT THIS LOCATION, TYP. BOTH SIDES OF DUGOUT (SEE NOTE #01 BELOW)
13. GALVANIZED CHAINLINK FENCE RAILINGS & FABRIC AS SPECIFIED. (SEE DETAIL #07.L6.0) FOR ADDITIONAL INFORMATION
14. STEEL ANGLE BEAM - 6" HORZ. X 6" VERT. X 3/16". BOLT TO POSTS. POWDER COAT, COLOR SHALL BE TEXTURED MATTE BLACK FINISH

NOTES:
1. ROOF STRUCTURE SUPPORT COLUMN FOR WIDE FLANGE I-BEAM (TYP. BOTH SIDES OF DUGOUT). 6"x6"x 1/4" TUBE STEEL POST WELDED TO 12"x17"x 1/4" ANCHOR PLATE. SECURE TO CONCRETE WITH (4) 316 STAINLESS STEEL 1/2" DIA. x 6" CONCRETE WEDGE ANCHORS SET w/ EPOXY. PLACE ANCHOR PLATES TO MATCH EXISTING CONCRETE CORNER EDGES AS SHOWN. ACTUAL LOCATION OF TUBE STEEL ON ANCHOR PLATE MUST BE DETERMINED WITH FIELD VERIFIED MEASUREMENTS. LOCATION OF TUBE STEEL ON ANCHOR PLATE WILL VARY AT EACH LOCATION BASED ON AS-BUILT FIELD CONDITIONS. TUBE STEEL POSTS AND ANCHOR PLATES SHALL BE POWDER COATED, MATTE BLACK TEXTURED FINISH, SUBMIT COLOR SAMPLE TO LANDSCAPE ARCHITECT FOR APPROVAL.
2. USE SQUARE POST CHAIN LINK RAIL AND GATE HARDWARE AT SQUARE TUBES.

01 BASE BID -THIRD BASE CHAINLINK BASEBALL DUGOUT W/ COVERED & OPEN STORAGE (PLAN)

1/8" = 1'-0"

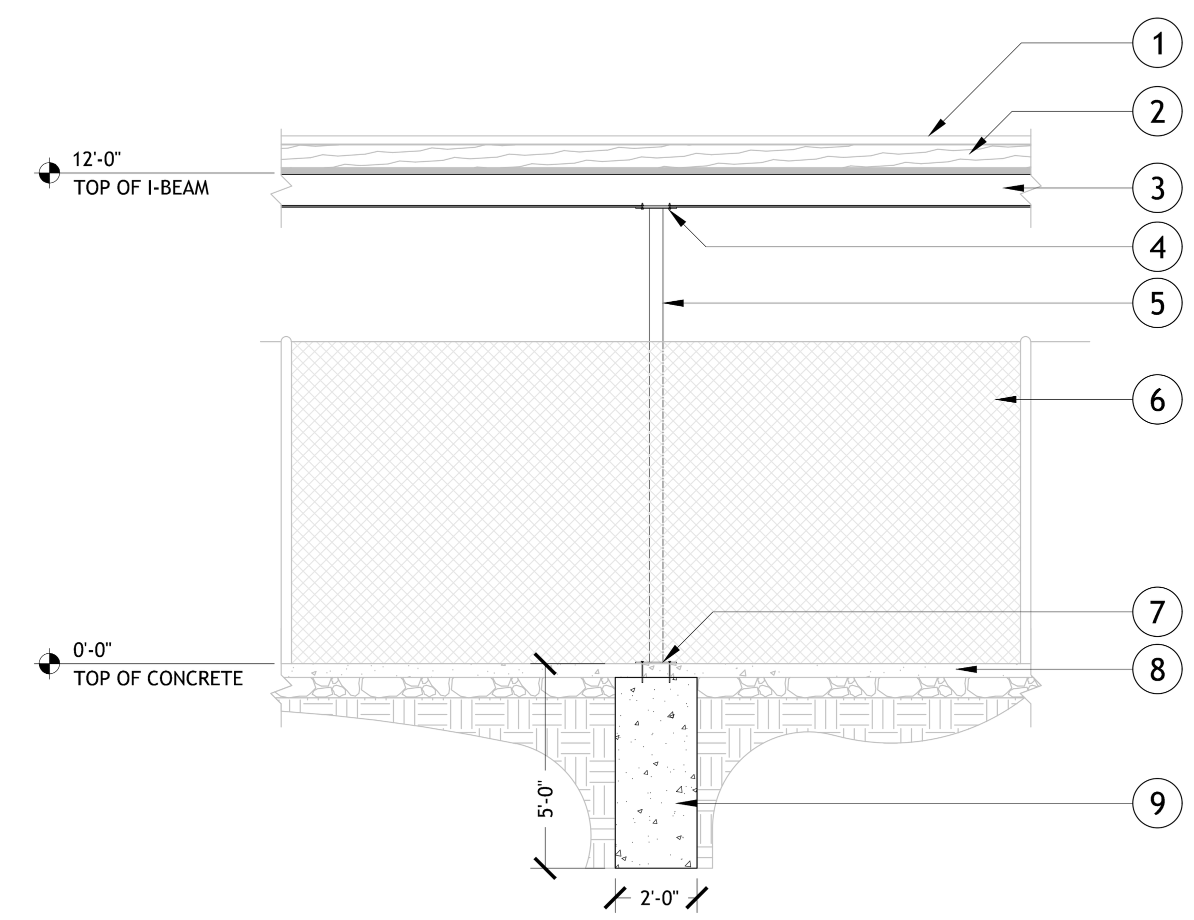

1. BASE BID - METAL DRIP EDGE. COLOR SHALL BE BLACK
2. BASE BID - 1" x 8 1/4" WIDE COMPOSITE EXTERIOR WOOD FASCIA. PAINTED FINISH, COLOR SHALL BE FLAT BLACK
3. ALT. #01 - MID-SPAN WIDE FLANGE STEEL I-BEAM W10X12. POWDER COAT, COLOR SHALL BE MATTE BLACK TEXTURED FINISH (SEE DETAILS #02,04,& 06/SHEET L6.2)
4. ALT. #01 - MID-SPAN POST TOP PLATE (SEE DETAIL #04/SHEET L6.2)
5. ALT. #01 - ADDITIONAL NEW (4") SQUARE TUBE STEEL POST INSTALLED AT THIS MID-SPAN LOCATION, (SEE NOTE #01 BELOW)
6. EXISTING DUGOUT FENCE (PHASE I)
7. ALT. #01 - MID-SPAN POST BASE PLATE (SEE DETAIL #06/SHEET L6.2)
8. BASE BID - (4") THICK CONCRETE FLATWORK OVER (4") MINIMUM 5/8" - MINUS COMPACTED AGGREGATE BASE (SEE DETAIL #01/SHEET L6.0)
9. ALT. #01 - ADDITIONAL CONCRETE FOOTING UNDER MID-SPAN TUBE STEEL POST

NOTES:
1. ALTERNATE NO. 01 (ALT. #01) INCLUDES THE SUBSTITUTION OF THE BASE BID FULL-SPAN W10X54 I-BEAM WITH A SMALLER W10X12 I-BEAM. THE ADDITION OF A 4-INCH SQUARE TUBE STEEL POST LOCATED AT THE MID-SPAN OF THE I-BEAM SHALL BE INSTALLED TO ASSIST WITH CARRYING THE I-BEAM LOAD OVERHEAD. A TOP PLATE AND BOTTOM BASE PLATE SHALL BE WELDED TO THE MID-SPAN POST AND ATTACHED TO THE I-BEAM ABOVE AND ANCHORED TO THE CONCRETE BELOW PER DETAILS XXXX/SHEET L6.XX. AN ADDITIONAL CONCRETE FOOTING WILL BE REQUIRED AS WELL UNDER THE MID-SPAN TUBE STEEL POST.

02 ALT. #01 - MID-SPAN DUGOUT BEAM, TYP. (ELEVATION)

1/4" = 1'-0"

ALTERNATE NO. 01 (ALT. #01) - MID-SPAN DUGOUT BEAM. PROVIDE W10X12 I-BEAM & CENTER POST IN LIEU OF W10X54 FULL-SPAN I-BEAM. SPAN LENGTH ~36FT (VERIFY). SEE DETAIL #02/SHEET L6.2

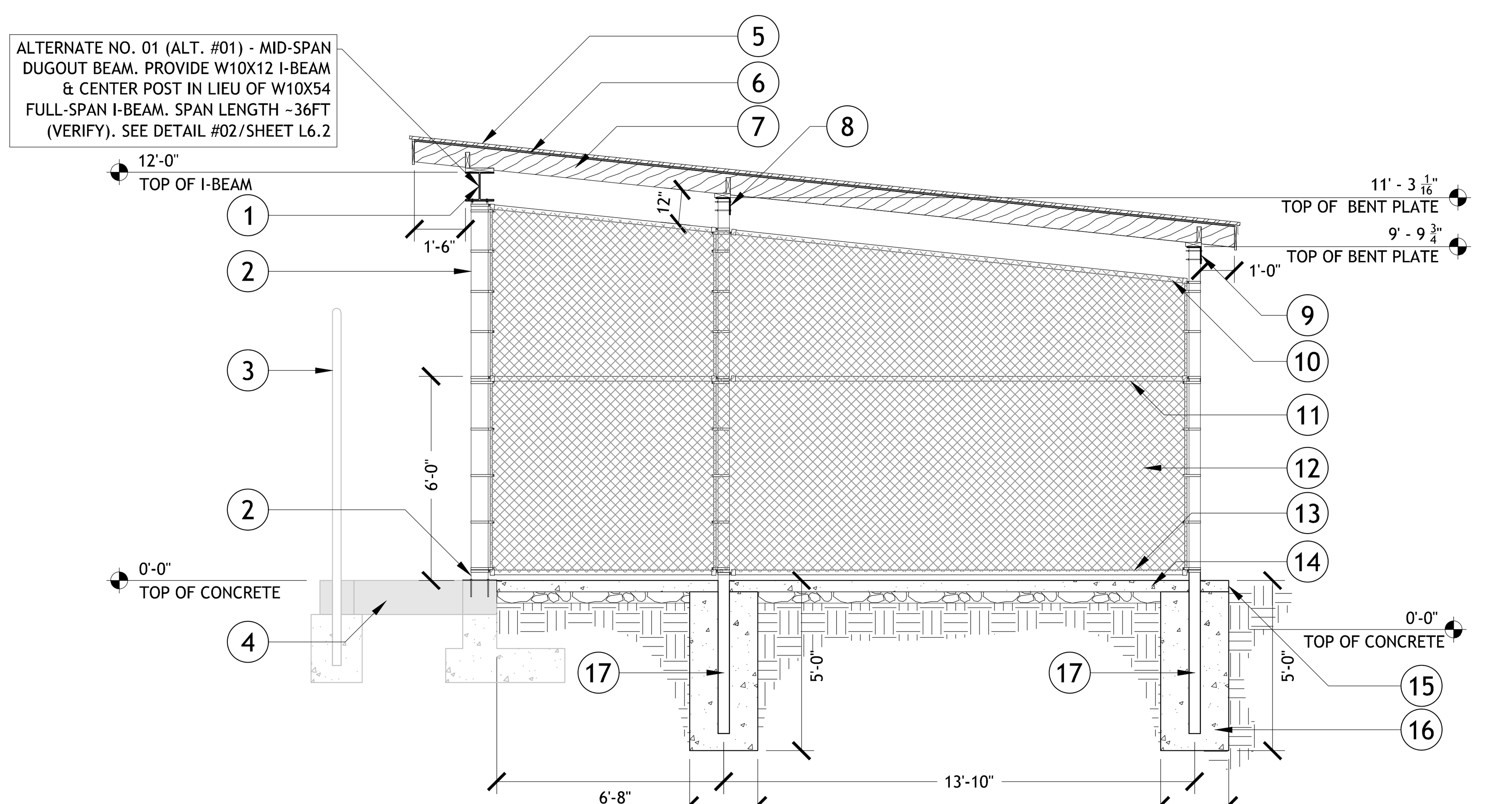

1. WIDE FLANGE STEEL I-BEAM W10X54. POWDER COAT, COLOR SHALL BE MATTE BLACK TEXTURED FINISH (SEE DETAIL #03/SHEET L6.1)
2. NEW SQUARE TUBE STEEL POST TO BE INSTALLED AT THIS LOCATION, TYP. BOTH SIDES OF DUGOUT (SEE NOTE #01 BELOW)
3. EXISTING DUGOUT FENCE (PHASE I)
4. EXISTING CONCRETE SYNTHETIC TURF NAILER EDGE (PHASE I)
5. STANDING SEAM METAL ROOFING - METAL SALES 29-GAUGE "CLASSIC RIB" 3FT. WIDE. COLOR SHALL BE BLACK
6. 5/8" CDX PLYWOOD SHEATHING TOPPED w/ 30LB. ROOFING FELT
7. 2" x 8" ROOF RAFTERS (16") O.C.
8. CENTER STEEL ANGLE BEAM - 6" HORZ. X 6" VERT. X 3/16". BOLT TO POSTS. POWDER COAT, COLOR SHALL BE TEXTURED MATTE BLACK FINISH (SEE DETAIL #04/SHEET L6.1)
9. END STEEL ANGLE BEAM - 6" HORZ. X 6" VERT. X 3/16". BOLT TO POSTS. POWDER COAT, COLOR SHALL BE TEXTURED MATTE BLACK FINISH (SEE DETAIL #05/SHEET L6.1)
10. TOP RAIL
11. MIDDLE RAIL
12. GALVANIZED CHAINLINK FENCE RAILINGS & FABRIC AS SPECIFIED. (SEE DETAIL #07/SHEET L6.0) FOR ADDITIONAL INFORMATION
13. BOTTOM RAIL
14. (4") THICK CONCRETE FLATWORK OVER (4") MINIMUM 5/8" - MINUS COMPACTED AGGREGATE BASE (SEE DETAIL #01/SHEET L6.0)
15. EDGE OF CONCRETE FLATWORK
16. CONCRETE FOOTING
17. (4") DIAMETER POST

NOTES:
1. ROOF STRUCTURE SUPPORT COLUMN FOR WIDE FLANGE I-BEAM (TYP. BOTH SIDES OF DUGOUT). 6"x6"x 1/4" TUBE STEEL POST WELDED TO 12"x17"x 1/4" ANCHOR PLATE. SECURE TO CONCRETE WITH (4) 316 STAINLESS STEEL 1/2" DIA. x 6" CONCRETE WEDGE ANCHORS SET w/ EPOXY. PLACE ANCHOR PLATES TO MATCH EXISTING CONCRETE CORNER EDGES AS SHOWN. ACTUAL LOCATION OF TUBE STEEL ON ANCHOR PLATE MUST BE DETERMINED WITH FIELD VERIFIED MEASUREMENTS. LOCATION OF TUBE STEEL ON ANCHOR PLATE WILL VARY AT EACH LOCATION BASED ON AS-BUILT FIELD CONDITIONS. TUBE STEEL POSTS AND ANCHOR PLATES SHALL BE POWDER COATED, MATTE BLACK TEXTURED FINISH, SUBMIT COLOR SAMPLE TO LANDSCAPE ARCHITECT FOR APPROVAL.
2. USE SQUARE POST CHAIN LINK RAIL AND GATE HARDWARE AT SQUARE TUBES.

03 BASE BID - THIRD BASE CHAINLINK BASEBALL DUGOUT W/ COVERED & OPEN STORAGE (ELEVATION 'B')

1/4" = 1'-0"

1. 3/8" STEEL PLATE WELDED TO TOP OF (4") SQUARE COLUMN w/ 3/16" CONTINUOUS FILLET WELD ALL SIDES. POWDER COAT, COLOR SHALL BE TEXTURED MATTE BLACK FINISH
2. ALTERNATE NO. 01 (ALT. #01) CENTER LINE OF MID-SPAN I-BEAM OVERHEAD
3. (4) 1/2" DIAMETER HOLES. ATTACH TO HORIZONTAL I-BEAM w/ (4) 316 STAINLESS STEEL 1/2" DIAMETER MACHINE BOLTS w/ NUT & WASHERS
4. ALTERNATE NO. 01 (ALT. #01) MID-SPAN W10X12 I-BEAM OVERHEAD

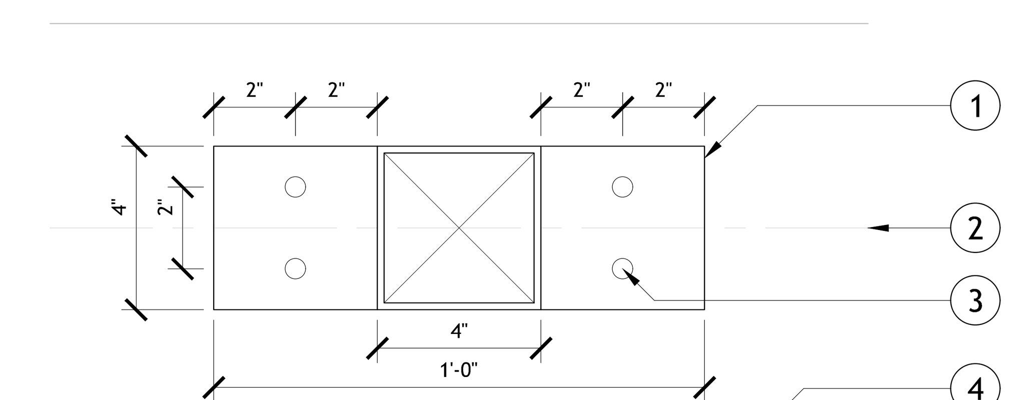

04 ALT. 01 - MID-SPAN POST TOP PLATE DETAIL (PLAN)

3" = 1'-0"

ALTERNATE NO. 01 (ALT. #01) - MID-SPAN DUGOUT BEAM. PROVIDE W10X12 I-BEAM & CENTER POST IN LIEU OF W10X54 FULL-SPAN I-BEAM. SPAN LENGTH ~36FT (VERIFY). SEE DETAIL #02/SHEET L6.2

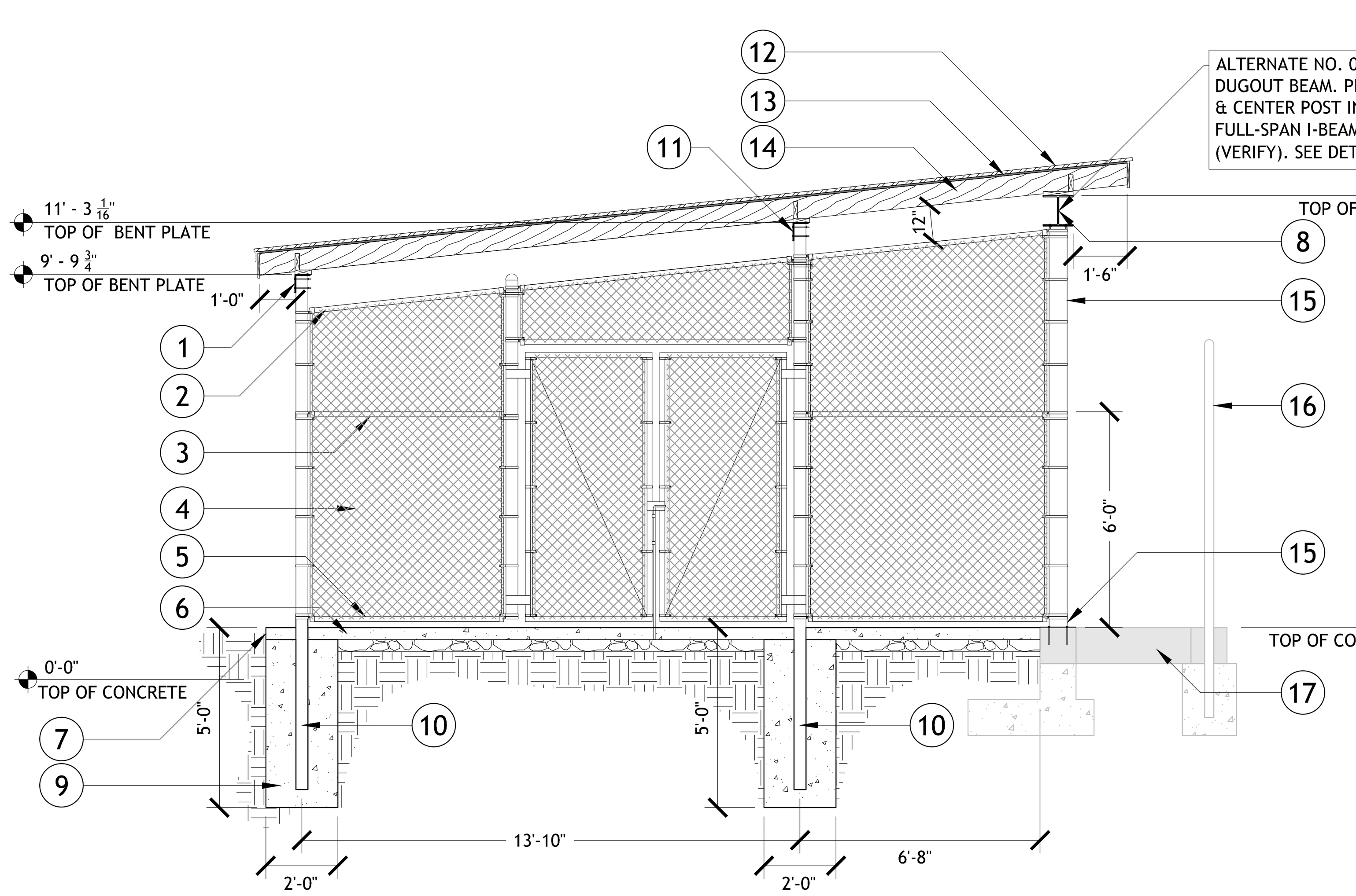

1. END STEEL ANGLE BEAM - 6" HORZ. X 6" VERT. X 3/16". BOLT TO POSTS. POWDER COAT, COLOR SHALL BE TEXTURED MATTE BLACK FINISH (SEE DETAIL #05/SHEET L6.1)
2. TOP RAIL
3. MIDDLE RAIL
4. GALVANIZED CHAINLINK FENCE RAILINGS & FABRIC AS SPECIFIED. (SEE DETAIL #07/SHEET L6.0) FOR ADDITIONAL INFORMATION
5. BOTTOM RAIL
6. (4") THICK CONCRETE FLATWORK OVER (4") MINIMUM 5/8" - MINUS COMPACTED AGGREGATE BASE (SEE DETAIL #01/SHEET L6.0)
7. EDGE OF CONCRETE FLATWORK
8. WIDE FLANGE STEEL I-BEAM W10X54. POWDER COAT, COLOR SHALL BE MATTE BLACK TEXTURED FINISH (SEE DETAIL #03/SHEET L6.1)
9. CONCRETE FOOTING
10. (4") DIAMETER POST
11. CENTER STEEL ANGLE BEAM - 6" HORZ. X 6" VERT. X 3/16". BOLT TO POSTS. POWDER COAT, COLOR SHALL BE TEXTURED MATTE BLACK FINISH (SEE DETAIL #04/SHEET L6.1)
12. STANDING SEAM METAL ROOFING - METAL SALES 29-GAUGE "CLASSIC RIB" 3FT. WIDE. COLOR SHALL BE BLACK
13. 5/8" CDX PLYWOOD SHEATHING TOPPED w/ 30LB. ROOFING FELT
14. 2" x 8" ROOF RAFTERS (16") O.C.
15. NEW SQUARE TUBE STEEL POST TO BE INSTALLED AT THIS LOCATION, TYP. BOTH SIDES OF DUGOUT (SEE NOTE #01 BELOW)
16. EXISTING DUGOUT FENCE (PHASE I)
17. EXISTING CONCRETE SYNTHETIC TURF NAILER EDGE (PHASE I)

NOTES:
1. ROOF STRUCTURE SUPPORT COLUMN FOR WIDE FLANGE I-BEAM (TYP. BOTH SIDES OF DUGOUT). 6"x6"x 1/4" TUBE STEEL POST WELDED TO 12"x17"x 1/4" ANCHOR PLATE. SECURE TO CONCRETE WITH (4) 316 STAINLESS STEEL 1/2" DIA. x 6" CONCRETE WEDGE ANCHORS SET w/ EPOXY. PLACE ANCHOR PLATES TO MATCH EXISTING CONCRETE CORNER EDGES AS SHOWN. ACTUAL LOCATION OF TUBE STEEL ON ANCHOR PLATE MUST BE DETERMINED WITH FIELD VERIFIED MEASUREMENTS. LOCATION OF TUBE STEEL ON ANCHOR PLATE WILL VARY AT EACH LOCATION BASED ON AS-BUILT FIELD CONDITIONS. TUBE STEEL POSTS AND ANCHOR PLATES SHALL BE POWDER COATED, MATTE BLACK TEXTURED FINISH, SUBMIT COLOR SAMPLE TO LANDSCAPE ARCHITECT FOR APPROVAL.
2. USE SQUARE POST CHAIN LINK RAIL AND GATE HARDWARE AT SQUARE TUBES.

05 BASE BID -THIRD BASE CHAINLINK BASEBALL DUGOUT W/ COVERED & OPEN STORAGE (ELEVATION 'C')

1/4" = 1'-0"

1. 3/4" HOLE EACH SIDE TO ACCEPT 316 STAINLESS STEEL 3/4" DIA. x 6" CONCRETE WEDGE ANCHORS SET w/ EPOXY
2. 1/2" THICK STEEL ANCHOR PLATE WELDED TO BOTTOM OF (4") SQUARE COLUMN w/ 3/16" CONTINUOUS FILLET WELD ALL SIDES. POWDER COAT, COLOR SHALL BE TEXTURED MATTE BLACK FINISH

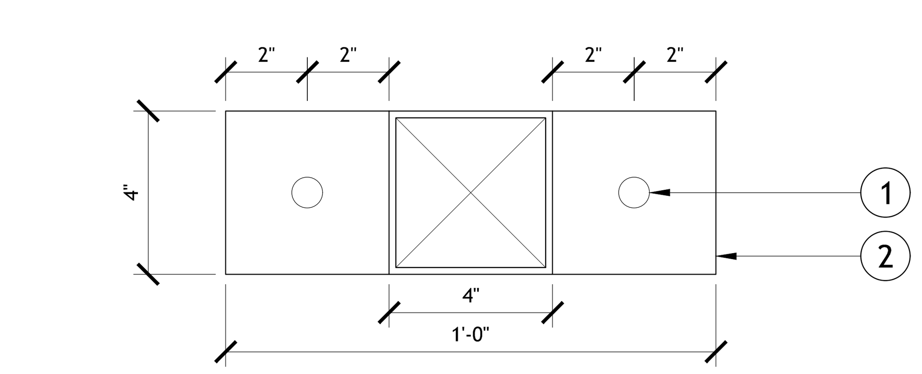

06 ALT. 01 - MID-SPAN POST BASE PLATE DETAIL (PLAN)

3" = 1'-0"

STATE OF IDAHO LICENSED LANDSCAPE ARCHITECT LA-190 09-29-20

COPYRIGHT BERNARDO WILLS ARCHITECTS PC 2013

153 SOUTH JEFFERSON SPOKANE WASHINGTON 99201 509.838.4511 FAX 509.838.4605 WWW.BERNARDOWILLS.COM

100% BID SET
CONSTRUCTION SET
LANDSCAPE
SITE DETAILS

War Memorial Field
Improvements - Phase 2A
Spring Facilities
801 Ontario Street
Sandpoint, Idaho 83864

BWA BERNARDO WILLS ARCHITECTS PC

Project No: 19-10-207
Drawn by:
Date: 09-29-20

L6.2

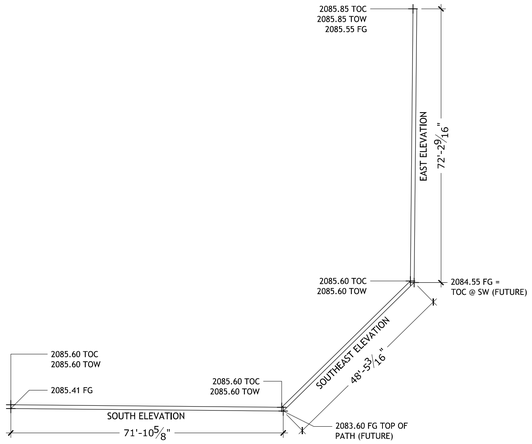

01 RETAINING WALL (PLAN VIEW)

1" = 20'

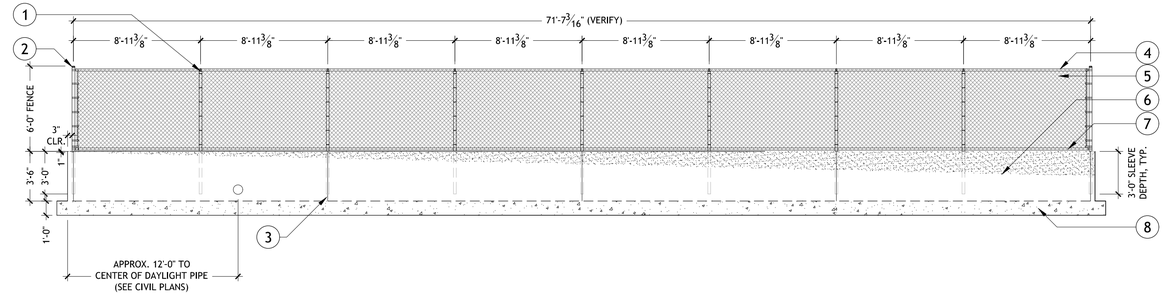

1. LINE POST, TYP. (5) (SEE DETAIL #01/SHEET S0.1 & SPECIFICATIONS FOR ADDITIONAL SIZING INFORMATION)
2. TERMINAL POST, TYP. (2) w/ SLEEVE. (SEE DETAIL #01/SHEET S0.1 & SPECIFICATIONS FOR ADDITIONAL INFORMATION)
3. VERTICAL CONCRETE SCORE JOINT DOWN FACE OF WALL, TYP.
4. TOP RAIL
5. GALVANIZED CHAINLINK FENCE RAILINGS & FABRIC AS SPECIFIED (SEE DETAIL #07.L6.0) FOR ADDITIONAL INFORMATION
6. FINISH GRADE (SLOPE OF FINISHED SOIL)
7. BOTTOM RAIL
8. CONCRETE WALL FOOTING, (SEE DETAIL #01/SHEET S1.0)

02 SOUTH WALL ELEVATION

3/16" = 1'-0"

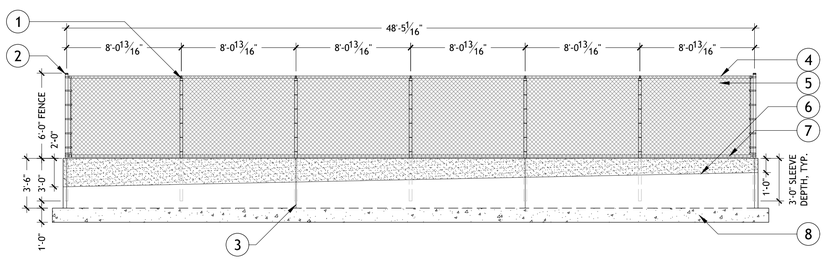

1. LINE POST, TYP. (5) (SEE DETAIL #01/SHEET S0.1 & SPECIFICATIONS FOR ADDITIONAL SIZING INFORMATION)
2. TERMINAL POST, TYP. (2) w/ SLEEVE. (SEE DETAIL #01/SHEET S0.1 & SPECIFICATIONS FOR ADDITIONAL INFORMATION)
3. VERTICAL CONCRETE SCORE JOINT DOWN FACE OF WALL, TYP.
4. TOP RAIL
5. GALVANIZED CHAINLINK FENCE RAILINGS & FABRIC AS SPECIFIED (SEE DETAIL #07.L6.0) FOR ADDITIONAL INFORMATION
6. FINISH GRADE (FUTURE SIDEWALK/PATHWAY)
7. BOTTOM RAIL
8. CONCRETE WALL FOOTING, (SEE DETAIL #01/SHEET S1.0)

03 SOUTHEAST WALL ELEVATION

3/16" = 1'-0"

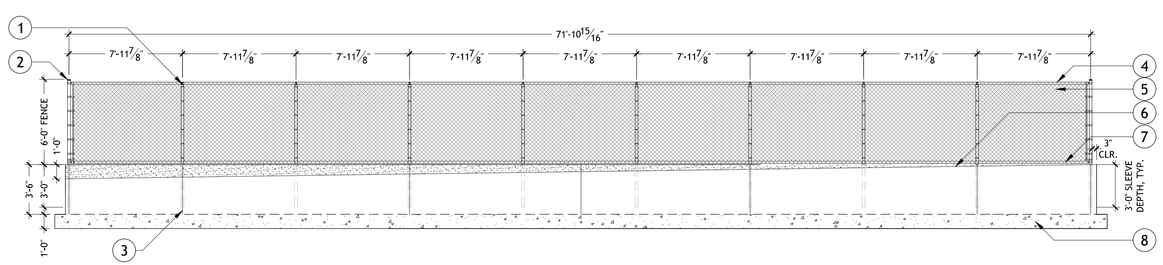

1. LINE POST, TYP. (5) (SEE DETAIL #01/SHEET S0.1 & SPECIFICATIONS FOR ADDITIONAL SIZING INFORMATION)
2. TERMINAL POST, TYP. (2) w/ SLEEVE. (SEE DETAIL #01/SHEET S0.1 & SPECIFICATIONS FOR ADDITIONAL INFORMATION)
3. VERTICAL CONCRETE SCORE JOINT DOWN FACE OF WALL, TYP.
4. TOP RAIL
5. GALVANIZED CHAINLINK FENCE RAILINGS & FABRIC AS SPECIFIED (SEE DETAIL #07.L6.0) FOR ADDITIONAL INFORMATION
6. FINISH GRADE (FUTURE SIDEWALK/PATHWAY)
7. BOTTOM RAIL
8. CONCRETE WALL FOOTING, (SEE DETAIL #01/SHEET S1.0)

04 EAST WALL ELEVATION

3/16" = 1'-0"

COPYRIGHT BERNARDO WILLS ARCHITECTS,PC 2013

STATE OF IDAHO
CHRISTOPHER SHELL R HARTEN
LICENSED LANDSCAPE ARCHITECT
LA-150
09-29-20

153 SOUTH JEFFERSON SPOKANE WASHINGTON 99201 509.838.4511 FAX 509.838.4605 WWW.BERNARDOWILLS.COM

100% BID SET
CONSTRUCTION SET
LANDSCAPE
SITE DETAILS

War Memorial Field
Improvements - Phase 2A
Spring Facilities
801 Ontario Street
Sandpoint, Idaho 83864

B W A BERNARDO | WILLS ARCHITECTS PC

Project No: 19-10-207
Drawn by:
Date: 09-29-20

L6.3

GENERAL NOTES - 19-11-062, MEMORIAL FIELD

I. GENERAL REQUIREMENTS

1. THE CONTRACTOR SHALL VERIFY ALL DIMENSIONS AND JOB SITE CONDITIONS BEFORE COMMENCING WORK AND SHALL REPORT ANY DISCREPANCIES TO ECLIPSE ENGINEERING, HENCEFORTH REFERRED TO AS THE ENGINEER

2. USE WRITTEN DIMENSIONS. DO NOT USE SCALED DIMENSIONS. WHERE NO DIMENSION IS PROVIDED, CONSULT THE ARCHITECT OR ENGINEER FOR CLARIFICATION BEFORE PROCEEDING WITH THE WORK.

3. THE CONTRACTOR SHALL FIELD VERIFY THE DIMENSIONS AND LAYOUT OF THE EXISTING CONSTRUCTION AS REQUIRED TO COORDINATE THE ERECTION OF THE WORK SPECIFIED IN THESE DRAWINGS. EXISTING BUILDING ELEMENTS ARE IDENTIFIED FOR REFERENCE WITH THE PREFIX (E).

4. DETAILS IN THE DRAWINGS PREFACED WITH THE TITLE "TYPICAL" MAY NOT NECESSARILY BE REFERENCED ON THE PLANS, BUT SHALL STILL APPLY AS SHOWN OR DESCRIBED IN THE DETAILS. WHERE NO DETAIL IS REFERENCED, IT SHALL BE THE CONTRACTOR'S RESPONSIBILITY TO CHOOSE THE RELEVANT TYPICAL DETAIL FROM THOSE PROVIDED.

5. THE DESIGN, ADEQUACY AND SAFETY OF ERECTION BRACING, SHORING, TEMPORARY SUPPORTS, SHORING OF EXISTING BUILDING ELEMENTS, ETC. IS THE SOLE RESPONSIBILITY OF THE CONTRACTOR. THE CONTRACTOR IS RESPONSIBLE FOR THE STABILITY OF THE STRUCTURE PRIOR TO THE ERECTION OF THE FRAMING AND OF THE LATERAL-LOAD-RESISTING SYSTEM IS COMPLETE.

6. THE ENGINEER HOLDS NO LIABILITY FOR UNAUTHORIZED CHANGES TO THE CONSTRUCTION DOCUMENTS MADE BY THE OWNER, CONTRACTOR, BUILDING OFFICIAL, OR OTHER INVOLVED PARTY.

7. THE CONTRACTOR SHALL BE SOLELY RESPONSIBLE FOR PROVIDING A SAFE PLACE TO WORK AND FOR MEETING THE REQUIREMENTS OF ALL APPLICABLE JURISDICTIONS, INCLUDING OSHA. THE CONTRACTOR SHALL EXECUTE THEIR WORK TO ENSURE THE SAFETY OF PERSONS AND ADJACENT PROPERTY AGAINST DAMAGE BY FALLING DEBRIS AND OTHER HAZARDS ASSOCIATED WITH THE WORK.

8. DESIGN CRITERIA

A. BUILDING CODE: 2015 INTERNATIONAL BUILDING CODE WITH STATE AND LOCAL AMENDMENTS AND ORDINANCES.

B. GEOTECHNICAL AND GRAVITY DESIGN DATA
- i. ALLOWABLE SOIL BEARING CAPACITY: 2000 PSF FOR GRAVITY LOADS
- ii. ROOF LIVE LOAD: 20 PSF
- iii. GROUND SNOW LOAD, Pg: 56 PSF
- iv. FLAT-ROOF SNOW LOAD, Pf: 55 PSF
- v. SNOW EXPOSURE FACTOR, Ce: 1.0
- vi. SNOW LOAD IMPORTANCE FACTOR, I: 1.0
- vii. THERMAL FACTOR, Ct: 1.2

C. WIND DESIGN DATA
- i. BASIC WIND SPEED: Vult = 115 MPH, Vasd = 90 MPH
- ii. RISK CATEGORY: II
- iii. WIND EXPOSURE CATEGORY: C
- iv. INTERNAL PRESSURE COEFFICIENT, Gcpi: +/- 0.18
- v. TOPOGRAPHIC FACTOR: Kzt: 1.0

D. SEISMIC DESIGN DATA
- i. RISK CATEGORY: II
- ii. SEISMIC IMPORTANCE FACTOR, Ie: 1.0
- iii. MAPPED SPECTRAL ACCELERATION, Ss: 0.343
- iv. MAPPED SPECTRAL ACCELERATION, S1: 0.113
- v. SITE CLASS: D
- vi. DESIGN SPECTRAL ACCELERATION, Sds: 0.349
- vii. DESIGN SPECTRAL ACCELERATION, Sd1: 0.176
- viii. SEISMIC DESIGN CATEGORY: C
- ix. BASIC SEISMIC FORCE RESISTING SYSTEM: STEEL ORDINARY CANTILEVERED COLUMNS

II. SHALLOW FOUNDATIONS

1. FOUNDATION EXCAVATION AND CONSTRUCTION SHALL BE PER GEOTECHNICAL REPORT PREPARED BY ALLWEST, INC. DATED 01/17/2020

III. COLD WEATHER CONSTRUCTION

1. CONCRETE:

A. THE CONTRACTOR SHALL PRACTICE STANDARD COLD-WEATHER CONCRETE METHODS AS PER ACI 306.

B. CALCIUM CHLORIDE SHALL NOT BE USED AS AN ACCELERATING ADMIXTURE.

C. CONCRETE DELIVERED TO THE SITE SHALL MEET THE TEMPERATURE REQUIREMENTS OF ASTM C94.

D. CONCRETE SHALL NOT BE PLACED UPON FROZEN SOILS OR SOILS WHICH CONTAIN FROZEN MATERIAL.

E. CONCRETE SHALL BE PROTECTED FROM FREEZING UNTIL THE SPECIFIED STRENGTH IS ATTAINED.

2. SOILS:

A. ALL SNOW AND ICE SHALL BE REMOVED FROM CUT AND FILL AREAS PRIOR TO ANY SITE WORK.

B. NO FOUNDATIONS OR FILL MATERIAL SHALL BE PLACED UPON SOILS, WHICH ARE FROZEN OR CONTAIN FROZEN MATERIAL.

C. FILL THAT HAS BEEN PLACED AND COMPACTED IN AN UNFROZEN STATE, WHICH SUBSEQUENTLY BECOMES FROZEN, SHALL BE RE-COMPACTED AT THE SURFACE (AFTER THAWING), BEFORE PLACING ADDITIONAL LIFTS.

D. EXPOSED NATIVE SUBGRADE THAT BECOMES FROZEN SHALL BE THAWED AND COMPACTED IN PLACE PRIOR TO FOOTING PLACEMENT.

E. NO FROZEN SOILS SHOULD BE USED AS FILL.

F. FOLLOWING PLACEMENT OF FOUNDATIONS, AND BEFORE PLACEMENT OF FILL THAT WILL PROVIDE FROST PROTECTION, FROST SHALL NOT BE PERMITTED TO PENETRATE BELOW FOUNDATIONS.

IV. CAST-IN-PLACE CONCRETE

1. CONCRETE:

A. CONSTRUCTION SHALL BE IN ACCORDANCE WITH ACI 301, UNLESS OTHERWISE NOTED.

B. REQUIRED COMPRESSIVE STRENGTH, f'c:
- i. CONCRETE ELEMENTS EXPOSED TO THE EXTERIOR GROUND AND WEATHER OR UNCONDITIONED SPACE OF THE BUILDING: 4500 PSI AT 28 DAYS, NORMAL WEIGHT. MAXIMUM WATER TO CEMENT RATIO = 0.45.
- ii. IF THE CONTRACTOR ELECTS TO REPLACE THE CEMENT IN THE CONCRETE MIX WITH HIGH-VOLUME FLY ASH, IT IS PERMISSIBLE TO ESTABLISH f'c AT 56 DAYS. THE CONTRACTOR SHALL COORDINATE THE DURATION OF SHORING AND TEMPORARY BRACING ACCORDINGLY.
- iii. STRUCTURAL DESIGN IS BASED ON A CONCRETE STRENGTH OF f'c = 2,500 PSI, NO CONCRETE STRENGTH TESTING REQUIRED.

C. DURABILITY REQUIREMENTS:
- i. CONCRETE ELEMENTS EXPOSED TO THE EXTERIOR GROUND AND WEATHER OR UNCONDITIONED SPACE OF THE BUILDING: PROVIDE TOTAL AIR CONTENT IN ACCORDANCE WITH EXPOSURE CLASS F2 IN ACCORDANCE WITH ACI 318, CHAPTER 19, PER THE FOLLOWING TABLE. TOLERANCE ON AIR CONTENT AS DELIVERED SHALL BE +/- 1.5 %:

NOMINAL MAXIMUM AGGREGATE SIZE	TOTAL AIR CONTENT EXPOSURE CLASS F2
1/2"	7%
3/4"	6%
1"	6%
1 1/2"	5.5%

- ii. ALL OTHER CONCRETE: NO REQUIREMENTS.

D. THE CONTRACTOR SHALL SUBMIT PROPOSED LOCATIONS OF CONSTRUCTION OR POUR JOINTS TO THE ARCHITECT AND ENGINEER FOR REVIEW.

E. ROUGHEN CONCRETE SURFACES OF CONSTRUCTION JOINTS AND AT LOCATIONS WHERE CONCRETE IS CAST AGAINST EXISTING CONCRETE TO 1/4" AMPLITUDE AND CLEAN OF LAITANCE, FOREIGN MATTER, AND LOOSE PARTICLES.

2. REINFORCING STEEL:

A. TYPICAL REINFORCING: ASTM A615 GRADE 40 FOR #3 BARS, ASTM A615 GRADE 60 FOR #4 BARS TO #7 BARS, AND ASTM A706 GRADE 60 FOR #8 BARS AND LARGER

B. REINFORCING TO BE WELDED: ASTM A706 GRADE 60

C. DEFORMED BAR ANCHORS: ASTM A496, Fy = 70 KSI.

D. PROVIDE CLEARANCE AND COVER OF REBAR AS FOLLOWS, UNLESS OTHERWISE NOTED:
- i. CAST AGAINST AND PERMANENTLY EXPOSED TO EARTH: 3 INCHES
- ii. FORMED SURFACES EXPOSED TO EARTH OR WEATHER, # 5 BARS AND SMALLER: 1 1/2 INCHES
- iii. FORMED SURFACES EXPOSED TO EARTH OR WEATHER, #6 BARS AND LARGER: 2 INCHES
- iv. INTERIOR SLABS, WALLS, AND JOISTS: 3/4 INCHES
- v. BEAMS AND COLUMNS: 1 1/2 INCHES TO TRANSVERSE REINFORCING

E. UNLESS OTHERWISE NOTED, REINFORCING BARS SHALL BE SPLICED WITH 50-BAR-DIAMETER LAPS, MINIMUM.

F. REINFORCING SHALL BE SUPPORTED PRIOR TO CONCRETING IN ACCORDANCE WITH THE CRSI MANUAL OF STANDARD PRACTICE, MSP-1.

G. REINFORCING SHALL BE DETAILED IN ACCORDANCE WITH ACI 315.

H. WELDING OF REINFORCING IS PERMITTED ONLY WHERE SHOWN IN THE DRAWINGS. WELDING SHALL CONFORM TO AWS D1.4, STRUCTURAL WELDING CODE - STEEL.

3. SLAB ON GRADE CONTROL JOINTS:

A. THE CONTRACTOR SHALL INSTALL TOOLED OR SAWCUT CONTROL JOINTS IN THE CONCRETE SLABS ON GRADE. THE JOINTS SHALL BE 1/8" WIDE AND 1/4 DEEP, WHERE t EQUALS THE SLAB THICKNESS.

B. THE JOINTS SHALL SUB-DIVIDE THE SLAB INTO PANELS WITH THE LONGER SIDE NO GREATER THAN 1.5 TIMES THE LENGTH OF THE SHORTER SIDE.

C. JOINTS IN INTERIOR SLABS SHALL BE SPACED AT NO FURTHER THAN 12'-0" APART AND JOINTS IN EXTERIOR SLABS SHALL BE SPACED AT NO FURTHER THAN 6'-0".

D. THE CONTRACTOR SHALL SUBMIT THEIR CONTROL JOINT PLAN TO THE ARCHITECT AND ENGINEER FOR REVIEW PRIOR TO THE FIRST SLAB ON GRADE CONCRETE POUR.

4. WELDED WIRE REINFORCEMENT: ASTM A1064, SHEETS ONLY

5. FIBER-REINFORCED CONCRETE: ASTM C1116 TYPE III 4.1.3, 100% HOMOPOLYMER POLYPROPYLENE MD FIBRILLATED FIBERS, 1.5 POUND PER CUBIC YARD, MINIMUM APPLICATION RATE

V. POST-INSTALLED ANCHORS

1. ADHESIVE ANCHORS AND DOWELS IN CONCRETE: SET-XP (ICC-ES ESR-2508) OR AT-XP (IAPMO UES ER-263) BY SIMPSON STRONG-TIE OR HIT-HY 200 (ICC-ES ESR-3187) BY HILTI.

2. EXPANSION ANCHORS IN CONCRETE: STRONG-BOLT 2 (ICC-ES ESR-3037) BY SIMPSON STRONG-TIE OR KWIK BOLT TZ (ICC-ES ESR-1917) BY HILTI.

3. SCREW ANCHORS IN CONCRETE: TITEN HD (ICC-ES ESR-2713) BY SIMPSON STRONG-TIE OR KWIK HUS-EZ (ICC-ES ESR-3027) BY HILTI.

4. FOLLOW MANUFACTURER'S INSTALLATION INSTRUCTIONS FOR ALL POST-INSTALLED ANCHORS, INCLUDING REQUIREMENTS FOR INSTALLING ANCHORS NEAR HEAD OR BED JOINTS IN MASONRY WALLS.

5. PROVIDE STAINLESS STEEL FASTENERS FOR EXTERIOR USE OR WHEN EXPOSED TO WEATHER. PROVIDE ELECTRO-PLATED CARBON STEEL ANCHORS AT OTHER LOCATIONS, UNLESS NOTED OTHERWISE.

6. IF REINFORCEMENT IS ENCOUNTERED DURING DRILLING, ABANDON AND SHIFT THE HOLE LOCATION TO AVOID THE REINFORCEMENT. PROVIDE A MINIMUM OF (2) ANCHOR DIAMETERS OR 1 INCH, WHICHEVER IS LARGER, OF SOUND CONCRETE OR MASONRY BETWEEN THE ANCHOR AND THE ABANDONED HOLE. FILL THE ABANDONED HOLE WITH NON-SHRINK GROUT. IF THE ANCHOR OR DOWEL MAY NOT BE SHIFTED AS NOTED ABOVE, SEEK GUIDANCE FROM THE ENGINEER.

7. LOCATE REINFORCEMENT AND CONFIRM FINAL ANCHOR LOCATIONS PRIOR TO FABRICATING PLATES, MEMBERS, OR OTHER STEEL ASSEMBLIES ATTACHED WITH POST-INSTALLED ANCHORS.

8. SUBSTITUTIONS: SUBSTITUTE PRODUCTS SHALL HAVE AN ASSOCIATED ICC-ES OR IAPMO EVALUATION REPORT AND THE CONTRACTOR MUST DEMONSTRATE PERFORMANCE IS EQUIVALENT TO THE SPECIFIED PRODUCTS. SUBSTITUTIONS WILL NOT BE CONSIDERED UNLESS THIS INFORMATION IS SUBMITTED.

VI. STRUCTURAL STEEL FRAMING

1. MATERIALS:

A. WIDE FLANGE AND WT SHAPES: ASTM A992

B. CHANNELS, ANGLES, PLATES, AND BARS: ASTM A36

C. GRADE 50 PLATES: ASTM A572, Fy = 50 KSI. USE ONLY WHERE INDICATED ON THE PLANS/DETAILS.

D. PIPE: ASTM A53, GRADE B

E. HSS: ASTM A500 OR ASTM A1085, GRADE B, Fy = 42 KSI FOR ROUNDS AND 46 KSI FOR RECTANGULAR AND SQUARE

2. FASTENERS:

A. MACHINE BOLTS: ASTM A307

B. BOLTS: ASTM A325-X

C. ANCHOR RODS: ASTM F1554, GRADE 36, THREADED WITH NUT, UNLESS OTHERWISE NOTED, AND HOOKED FOR ANCHORING WOOD SOLE PLATES.

D. SHEAR STUD CONNECTORS AND WELDED THREADED STUDS: ASTM A108, GRADE 1010 THRU 1020

E. NUTS: ASTM A563

F. HARDENED PLAIN AND BEVELED WASHERS: ASTM F436

3. WELDING

A. ARC-WELDING ELECTRODES AND/OR FILLER METALS TO BE LOW HYDROGEN TYPES E7XTX, E7XTXX, OR E70XXX, MINIMUM, AS APPLICABLE.

B. WELDING SHALL CONFORM TO AWS D1.1, *STRUCTURAL WELDING CODE - STEEL.*

C. ALL WELDING SHALL BE PERFORMED BY A WELDER CERTIFIED BY AWS AND THE GOVERNING JURISDICTION, IF APPLICABLE.

D. FIELD WELDING SYMBOLS HAVE NOT NECESSARILY BEEN INDICATED ON THE DRAWINGS. WHERE SHOWN, PROPER FIELD WELDING PER AWS SHALL BE USED. WHERE NO FIELD WELDING SYMBOLS ARE SHOWN, IT IS THE CONTRACTOR'S RESPONSIBILITY TO COORDINATE THE USE OF SHOP AND FIELD WELDS.

4. FABRICATION AND ERECTION

A. FABRICATION AND ERECTION SHALL BE IN ACCORDANCE WITH AISC 360 AND AISC 303.

B. STRUCTURAL STEEL AND FASTENERS INDICATED ON THE DRAWINGS TO BE HOT-DIP GALVANIZED SHALL BE COATED IN ACCORDANCE WITH ASTM A123 AND ASTM A153. REPAIR AND TOUCH UP GALVANIZING AFTER ERECTION ACTIVITIES ARE COMPLETE IN ACCORDANCE WITH ASTM A780.

NOTE:
ENSURE SCRATCH COAT WALL FINISH ON ALL EXPOSED WALL SURFACES. NATURAL GREY COLOR. REF ARCH FOR FURTHER INFORMATION.

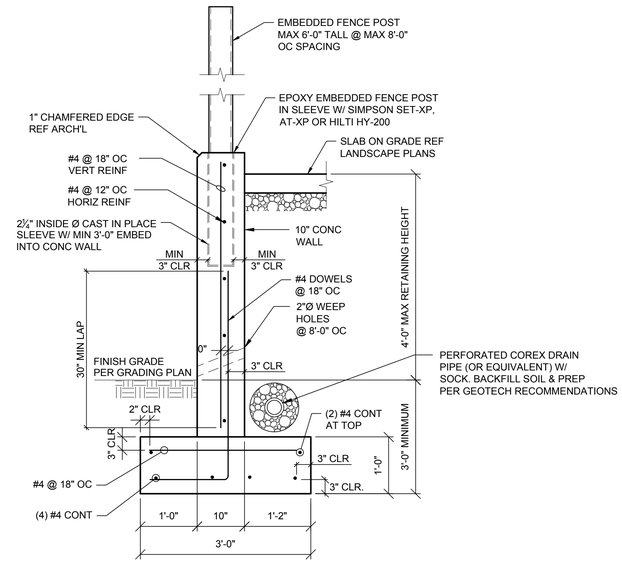

1 4'-0" MAX RETENTION
SCALE: 3/4" = 1'-0"

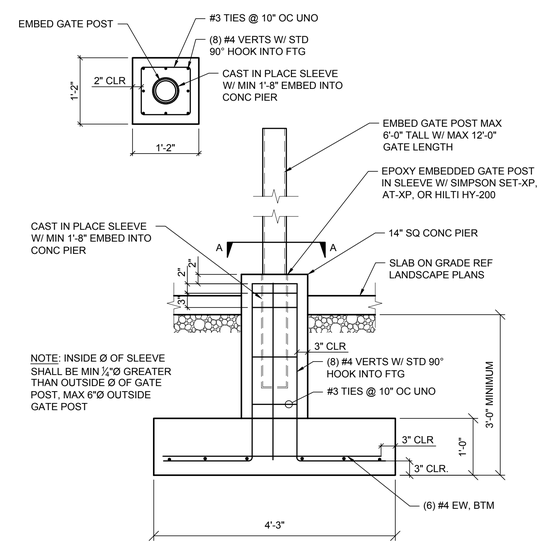

2 GATE POST FTG
SCALE: 3/4" = 1'-0"

COPYRIGHT BERNARDO WILLS ARCHITECTS,PC 2013

PROFESSIONAL ENGINEER REGISTERED 12589 STATE OF IDAHO BRIAN HANSON
9-28-2020

ECLIPSE ENGINEERING
601LS S REGAL ST, SUITE 314
SPOKANE, WA 99223
ECLIPSE-ENGINEERING.COM
(509) 921-7733

153 SOUTH JEFFERSON SPOKANE WASHINGTON 99201
509.838.4511 FAX 509.838.4605 WWW.BERNARDOWILLS.COM

BWA BERNARDO | WILLS ARCHITECTS PC

Revision Date:

100% BID SET
CONSTRUCTION SET
GENERAL NOTES

War Memorial Field
Improvements - Phase 2A
Spring Facilities
801 Ontario Street
Sandpoint, Idaho 83864

Project No: 19-11-062
Drawn by: JMB
Date: SEP 28, 2020

S0.1