WAR MEMORIAL FIELD IMPROVEMENTS
PHASE I

PROJECT MANUAL
VOLUME II OF II

CONTRACT DRAWINGS

FEBRUARY 2020

PART 8

CONTRACT DRAWINGS

CITY OF SANDPOINT - SANDPOINT, IDAHO

WAR MEMORIAL FIELD IMPROVEMENTS PHASE 1

801 ONTARIO STREET
SANDPOINT, IDAHO 83864

CONSTRUCTION DRAWING BID SET

02-18-2020

PROJECT LOCATION - SANDPOINT,IDAHO

NORTH

VICINITY MAPS (NTS):

SHEET INDEX

GENERAL:

G0.0 COVER SHEET & SHEET INDEX

CIVIL:

D1.1 CIVIL DEMOLITION PLAN
C1.1 CIVIL SITE PLAN
C1.2 STORM DRAIN PROFILE
C1.3 CEMENT TREATED BASE GRADING
C2.1 CIVIL DETAILS
C2.2 CIVIL DETAILS
C2.3 CIVIL DETAILS
C3.1 EROSION CONTROL PLAN

LANDSCAPE:

L0.0 SITE DEMOLITION PLAN (NORTH)
L0.1 SITE DEMOLITION PLAN (SOUTH)
L1.0 MATERIALS PLAN (NORTH)
L1.1 MATERIALS PLAN (SOUTH)
L2.0 LAYOUT PLAN (OVERALL)
L2.1 LAYOUT PLAN (NORTH)
L2.2 LAYOUT PLAN (SOUTH)
L3.0 NOT USED
L4.0 IRRIGATION PLAN (NORTH)
L4.1 IRRIGATION PLAN (SOUTH)
L5.0 NOT USED
L6.0 SITE DETAILS
L6.1 SITE DETAILS
L6.2 SITE DETAILS
L6.3 SITE DETAILS

ELECTRICAL:

E1.0 ABBREVIATIONS, GENERAL NOTES, & SHEET INDEX
E1.1 ELECTRICAL DEMOLITION PLAN
E1.2 ELECTRICAL SITE PLAN
E1.3 ENLARGED ELECTRICAL SITE PLAN
E5.1 ELECTRICAL DETAILS
E6.1 ELECTRICAL SCHEDULES AND ONE-LINES
E6.2 SCHEDULES
E8.1 REFERENCE ONLY
E8.2 REFERENCE ONLY
E8.3 REFERENCE ONLY
E8.4 REFERENCE ONLY

STRUCTURAL:

S0.1 GENERAL NOTES
S3.0 TENT ANCHOR PLAN
S4.1 STRUCTURAL DETAILS

PROJECT CONTACTS

CITY OF SANDPOINT
CITY ENGINEER/PROJECT MANAGER
DAN TADIC: PE, (208) 263-3577

BERNARDO WILLS ARCHITECTS
ARCHITECT/LANDSCAPE ARCHITECT (PRIME CONSULTANT)
DELL HATCH: PLA/PRINCIPAL,
STAN GRISWOLD: PLA/PROJECT LANDSCAPE ARCHITECT

WELCH COMER ENGINEERS
SURVEYOR/CIVIL ENGINEER (SUB CONSULTANT)
PHIL BOYD: PE/PRINCIPAL
TAYLOR TOMPKE: PROJECT ENGINEER

COFFMAN ENGINEERS
ELECTRICAL ENGINEER (SUB CONSULTANT)
ZACHARY YARBROUGH: PE

ECLIPSE ENGINEERING
STRUCTURAL ENGINEER (SUB CONSULTANT)
BRIAN HANSON: PE/PRINCIPAL

STATE OF IDAHO
DELL R. HATCH
LICENSED LANDSCAPE ARCHITECT
LA-150
02-18-20

COPYRIGHT BERNARDO WILLS ARCHITECTS,PC 2013

153 SOUTH JEFFERSON SPOKANE WASHINGTON 99201 509.838.4511 FAX 509.838.4605 WWW.BERNARDOWILLS.COM

B W A BERNARDO | WILLS ARCHITECTS PC

BID SET
Cover Sheet & Sheet Index

War Memorial Field Improvements - Phase I

801 Ontario Street
Sandpoint, Idaho 83864

Project No: 19-10-207
Drawn by:
Date: 02-18-2020

G0.0

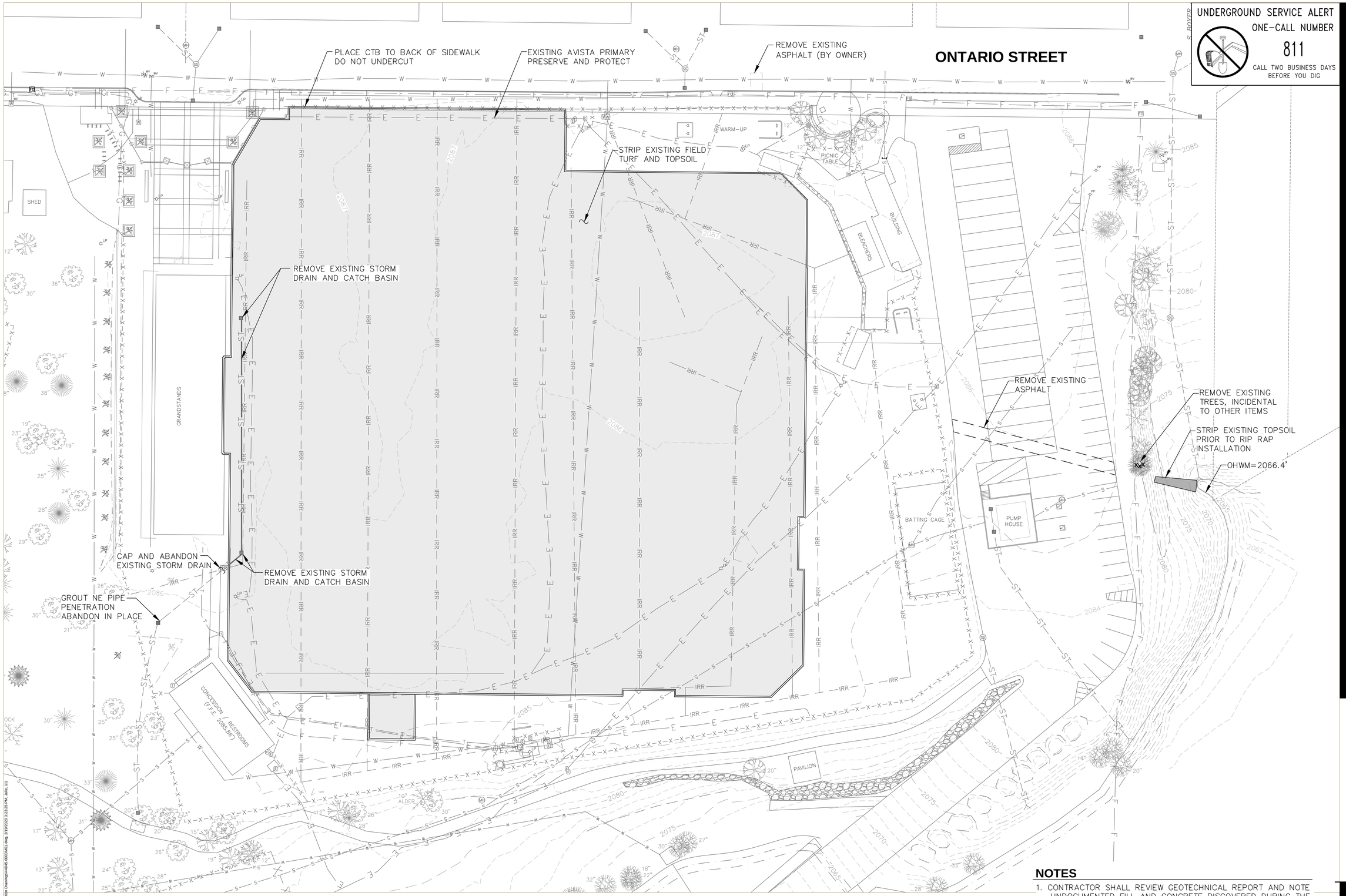

UNDERGROUND SERVICE ALERT
ONE-CALL NUMBER
811
CALL TWO BUSINESS DAYS BEFORE YOU DIG

PROFESSIONAL ENGINEER LICENSED 5898 STATE OF IDAHO PHILIP T. BOYD 02/18/20

COPYRIGHT BERNARDO WILLS ARCHITECTS.PC 2013

WELCH-COMER ENGINEERS | SURVEYORS
www.welchcomer.com
2300 N. Lakewood Drive, Suite 101
Coeur d'Alene, ID 83814
208-664-5832
(toll free) 877-664-5832
(fax) 208-664-5946

153 SOUTH JEFFERSON SPOKANE WASHINGTON 99201
509.838.4511 FAX 509.838.4605 WWW.BERNARDOWILLS.COM

BERNARDO | WILLS ARCHITECTS PC
B W A

BID SET

DEMOLITION PLAN

War Memorial Field Improvements - Phase I

801 Ontario Street
Sandpoint, Idaho 83864

DEMOLITION PLAN

SCALE: 1" = 30'-0"

NORTH

0 30 60

NOTES

1. CONTRACTOR SHALL REVIEW GEOTECHNICAL REPORT AND NOTE UNDOCUMENTED FILL AND CONCRETE DISCOVERED DURING THE BORINGS. REMOVAL OF ALL THIS MATERIAL WITHIN THE EXCAVATED LIMITS WILL BE INCIDENTAL TO EXCAVATION.

2. RETAIN AND PROTECT EXISTING SURVEY MONUMENTS. REFERENCE AND REPLACE ANY MONUMENTS DISTURBED OR DESTROYED.

Project No: 19-10-207
Drawn by:
Date: 02-18-2020

D1.1

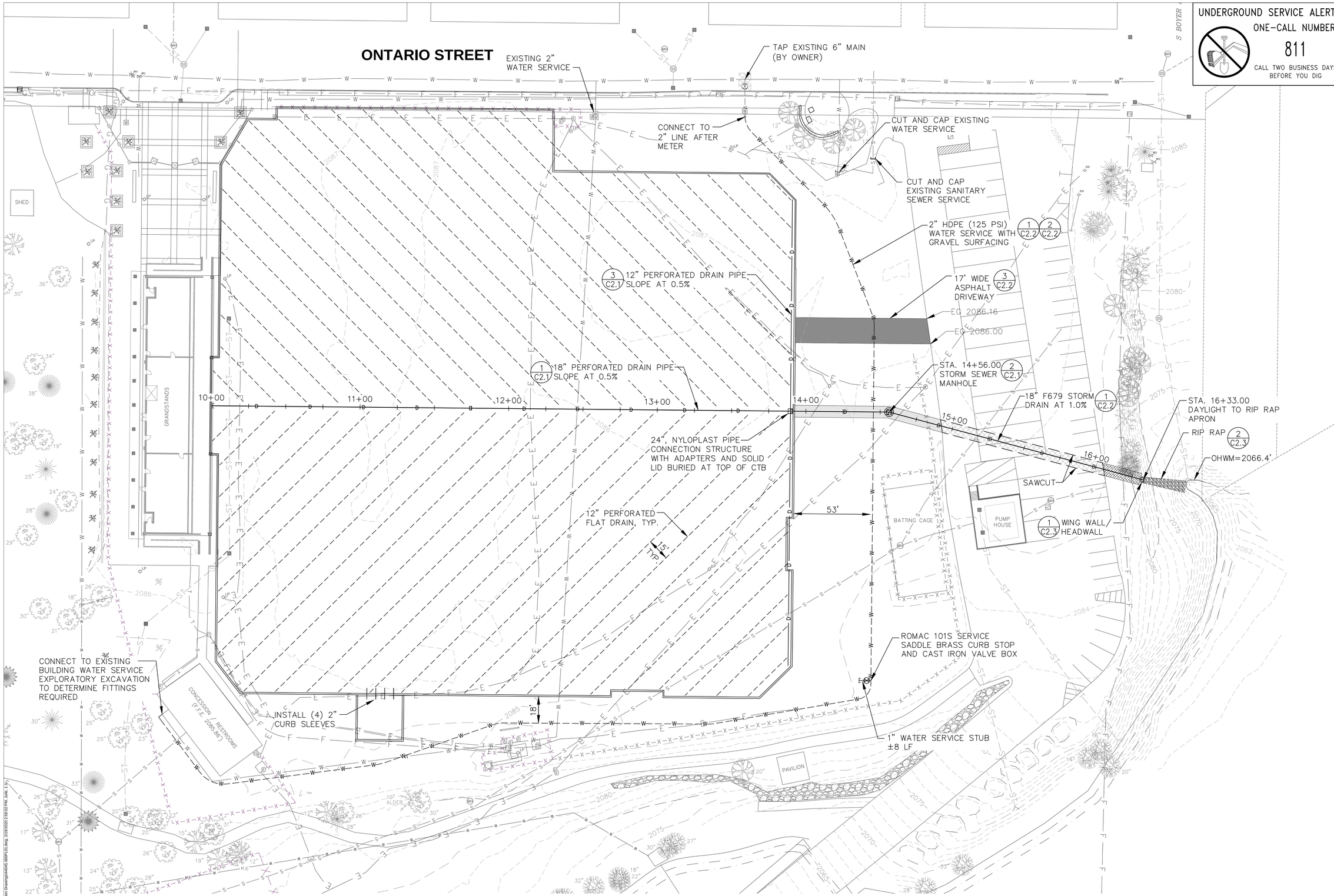

UNDERGROUND SERVICE ALERT
ONE-CALL NUMBER
811
CALL TWO BUSINESS DAYS BEFORE YOU DIG

NORTH

SITE PLAN

SCALE: 1" = 30'-0"

0 30 60

NOTES

1. SEE SHEET C3.1 FOR STABILIZATION OUTSIDE OF FIELD LIMITS.
2. EXISTING ELECTRICAL AND IRRIGATION LINES ARE NOT SHOWN. SEE ELECTRICAL AND LANDSCAPE PLAN SHEETS.

PROFESSIONAL ENGINEER LICENSED 7898 STATE OF IDAHO PHILIP T. BOYD 02/18/20

COPYRIGHT BERNARDO WILLS ARCHITECTS.PC 2013

WELCH-COMER ENGINEERS | SURVEYORS
www.welchcomer.com
2200 W. Larkin Ave., Suite 101
Coeur d'Alene, ID 83814
208-664-5832
(toll free) 877-664-5832
(fax) 208-664-5946

153 SOUTH JEFFERSON SPOKANE WASHINGTON 99201
509.838.4511 FAX 509.838.4605 WWW.BERNARDOWILLS.COM

BERNARDO | WILLS ARCHITECTS PC
BWA

BID SET

SITE PLAN

War Memorial Field Improvements - Phase I

801 Ontario Street
Sandpoint, Idaho 83864

Project No: 19-10-207
Drawn by:
Date: 02-18-2020

C1.1

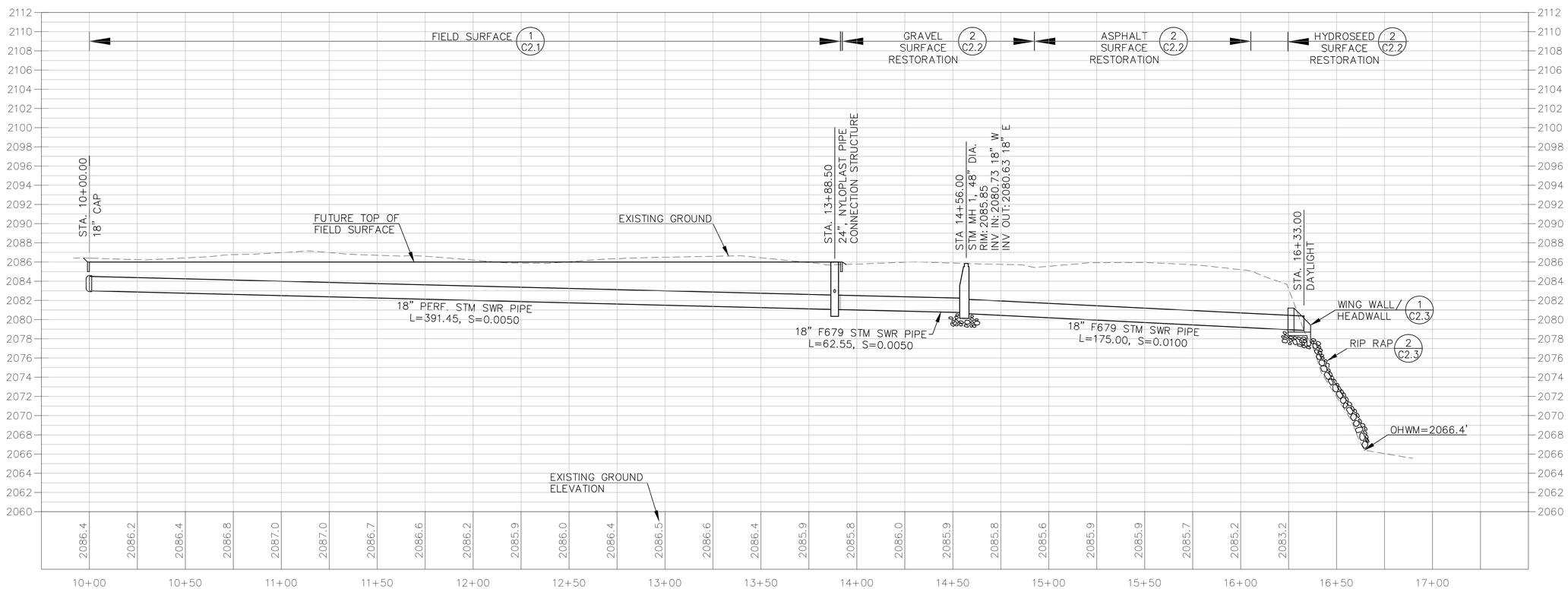

NORTH

STORM DRAIN PROFILE

SCALE: 1" = 30'-0"

0 30 60

COPYRIGHT BERNARDO WILLS ARCHITECTS,PC 2013

PROFESSIONAL ENGINEER LICENSED 5898 STATE OF IDAHO PHILIP T. BOND 02/18/20

WELCH-COMER ENGINEERS | SURVEYORS
www.welchcomer.com
320 E. Lakeside Ave. Suite 101
Coeur d'Alene, ID 83814
208-664-5832
toll free 877-815-5672
(fax) 208-664-5946

153 SOUTH JEFFERSON SPOKANE WASHINGTON 99201 509.838.4511 FAX 509.838.4605 WWW.BERNARDOWILLS.COM

BID SET

STORM DRAIN PROFILE

War Memorial Field Improvements - Phase I

801 Ontario Street
Sandpoint, Idaho 83864

BERNARDO | WILLS ARCHITECTS PC

BWA

Project No: 19-10-207
Drawn by:
Date: 02-18-2020

C1.2

N:\CAD\BD Projects\44045.000\Production Drawings\44045.000PLG1.dwg, 2/18/2020 3:18:07 PM, Jobe, 1:1

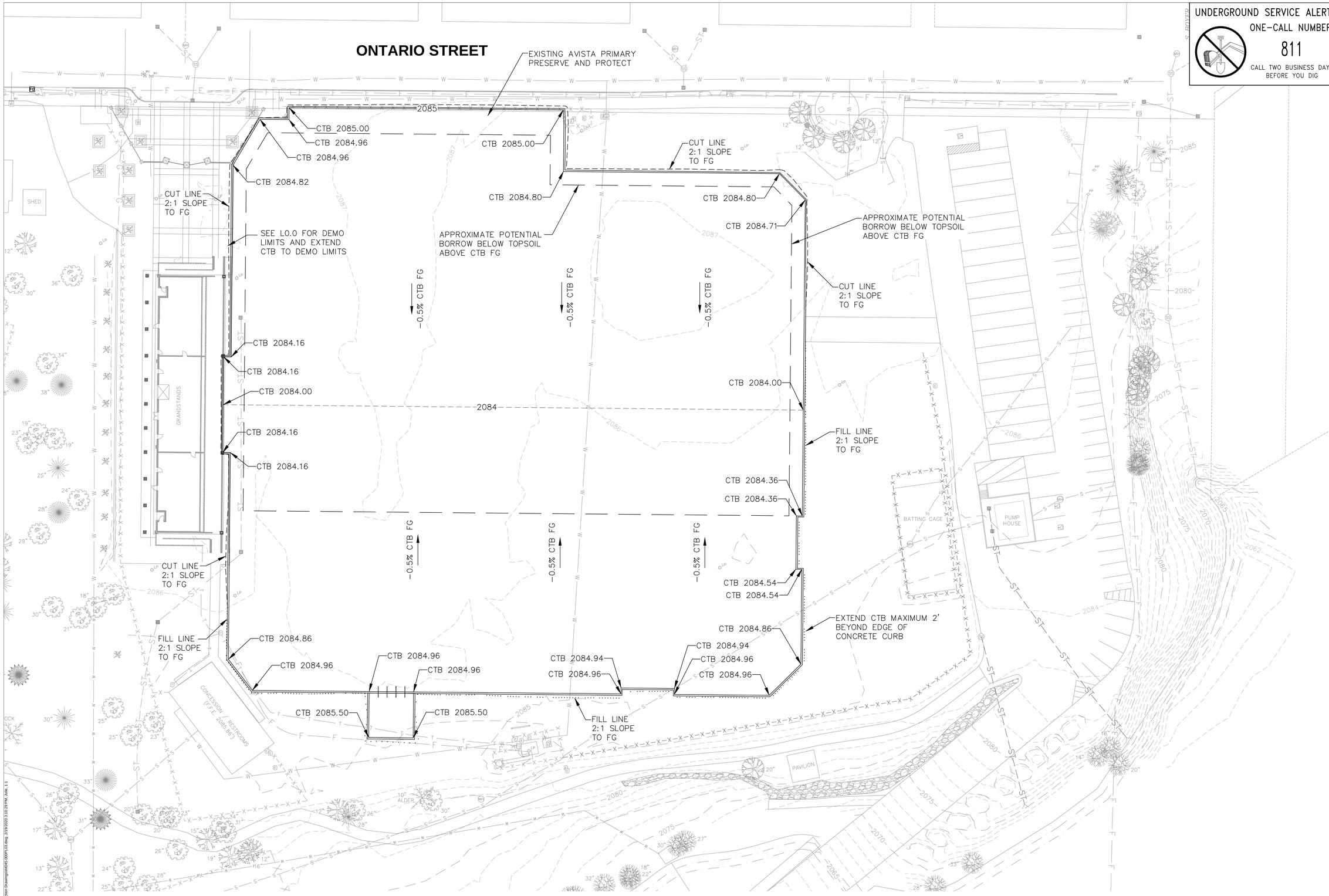

UNDERGROUND SERVICE ALERT
ONE-CALL NUMBER
811
CALL TWO BUSINESS DAYS BEFORE YOU DIG

PROFESSIONAL ENGINEER LICENSED 7898 STATE OF IDAHO PHILIP T. BOND 02/18/20

COPYRIGHT BERNARDO WILLS ARCHITECTS,PC 2013

WELCH-COMER ENGINEERS | SURVEYORS
www.welchcomer.com
2700 N. Lakewood Drive, Suite 101
Coeur d'Alene, ID 83814
Idaho Firm # 677 - 541-5272
208-664-5832
(fax) 208-664-5946

153 SOUTH JEFFERSON SPOKANE WASHINGTON 99201
509.838.4511 FAX 509.838.4605 WWW.BERNARDOWILLS.COM

BERNARDO | WILLS ARCHITECTS PC
B W A

BID SET

CEMENT TREATED BASE GRADING

War Memorial Field Improvements - Phase I

801 Ontario Street
Sandpoint, Idaho 83864

Project No: 19-10-207
Drawn by:
Date: 02-18-2020

C1.3

CONCRETE TREATED BASE GRADING

NORTH

SCALE: 1" = 30'-0"

0 30 60

NOTES

1. EXISTING ELECTRICAL AND IRRIGATION LINES ARE NOT SHOWN. SEE ELECTRICAL AND LANDSCAPE PLAN SHEETS.

N:\CAD\Projects\44045\000\Production Drawings\44045.000PLOS.dwg, 2/18/2020 3:32:25 PM, Jim, 1:1

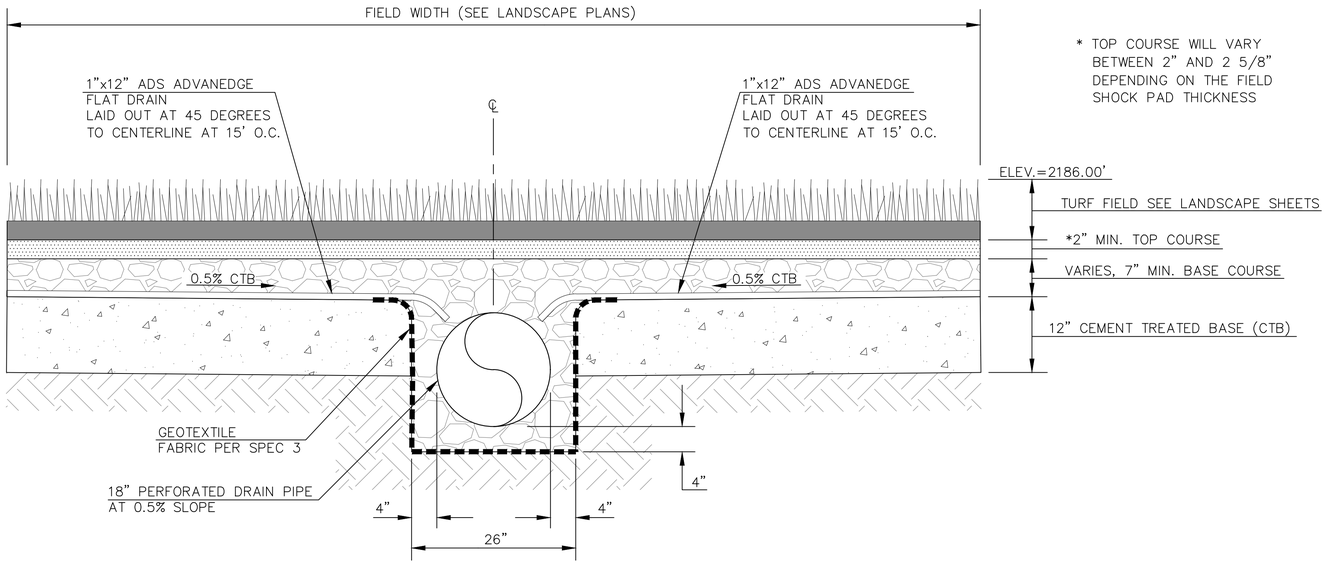

18" PERFORATED PIPE DRAIN DETAIL

NO SCALE

1 / C2.1

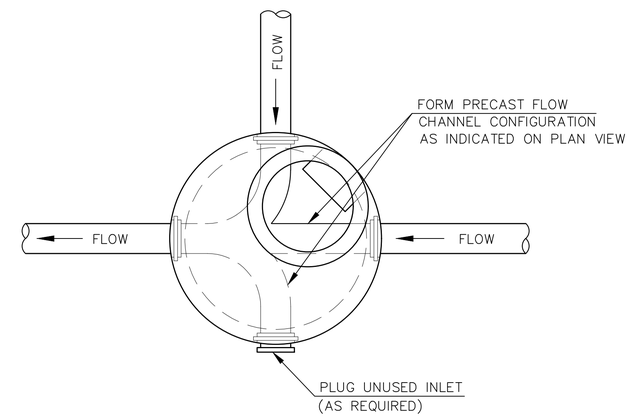

PLAN VIEW

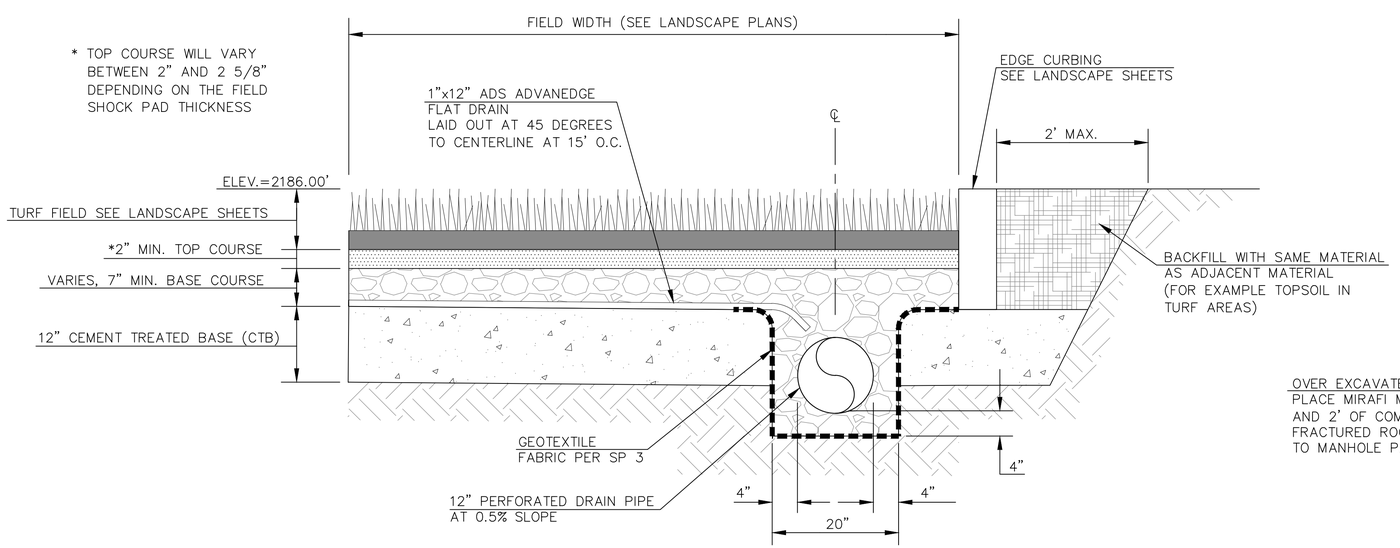

12" PERFORATED PIPE DRAIN DETAIL

NO SCALE

3 / C2.1

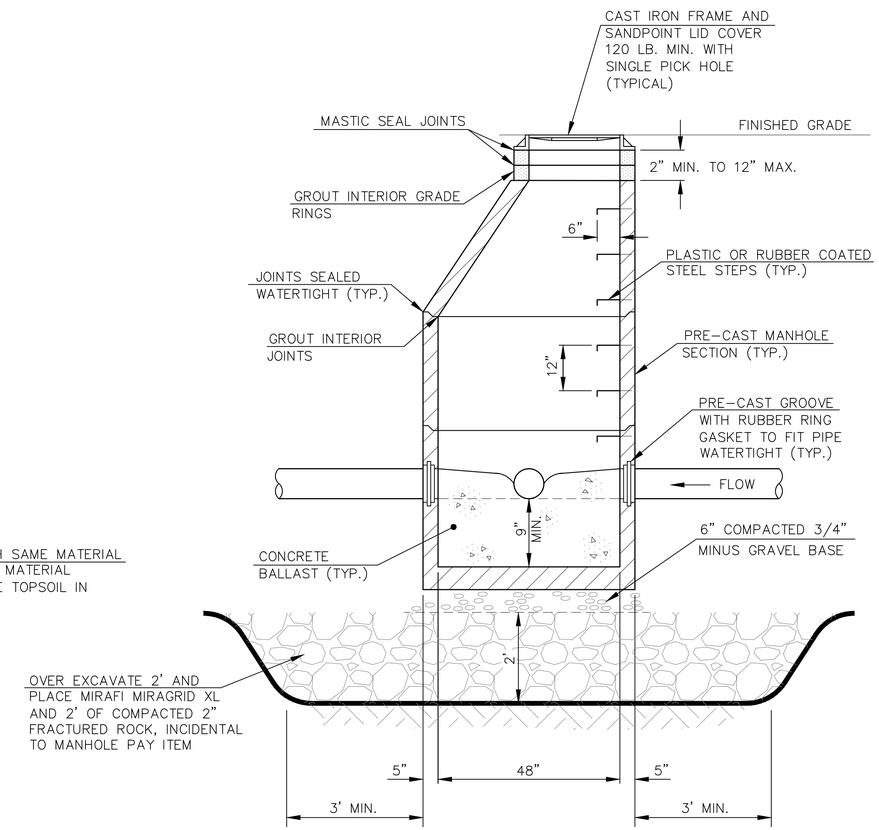

PROFILE

STORM SEWER MANHOLE DETAIL

NO SCALE

2 / C2.1

COPYRIGHT BERNARDO WILLS ARCHITECTS.PC 2013

PROFESSIONAL ENGINEER LICENSED 5898 STATE OF IDAHO PHILIP T. BOYD
02/18/20

WELCH-COMER ENGINEERS | SURVEYORS
www.welchcomer.com
2300 N. Lakewood Drive, Suite 101
Coeur d'Alene, ID 83814
208-664-5832
toll free 877-641-5872
(fax) 208-664-5946

153 SOUTH JEFFERSON SPOKANE WASHINGTON 99201 509.838.4511 FAX 509.838.4605 WWW.BERNARDOWILLS.COM

BID SET

CIVIL DETAILS

War Memorial Field Improvements - Phase I

801 Ontario Street
Sandpoint, Idaho 83864

BERNARDO | WILLS ARCHITECTS PC

BWA

Project No: 19-10-207
Drawn by:
Date: 02-18-2020

C2.1

N:\CivilBD Projects\44045.000\Production Drawings\44045.000\010.dwg, 2/18/2020 2:46:26 PM, Jillie.11

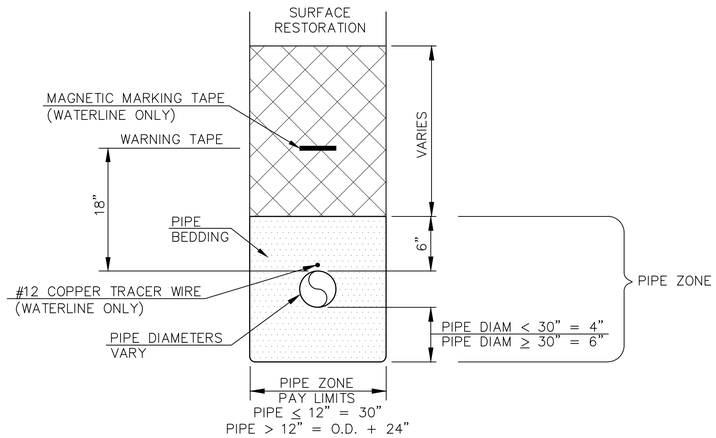

NOTES:

1. VERTICAL TRENCH WALLS WITH SHORING OR BACKSLOPE TO O.S.H.A. REGULATIONS.
2. IF TRENCH BOTTOM SOIL IS DISTURBED DURING EXCAVATION, COMPACT TO AT LEAST 95% AASHTO T-99.
3. IF TRENCH BOTTOM IS SOFT OR UNSTABLE, CONTACT ENGINEER.
4. COMPACTION IN PIPE ZONE TO BE 92% OF STANDARD PROCTOR DENSITY AS DETERMINED BY AASHTO T-99.
5. BEDDING SYSTEM IN PIPE ZONE SHALL BE CLASS A-1 AS DEFINED IN THE 2017 EDITION OF I.S.P.W.C.

WATER/STORMWATER PIPE ZONE DETAIL (1 / C2.2)

NO SCALE

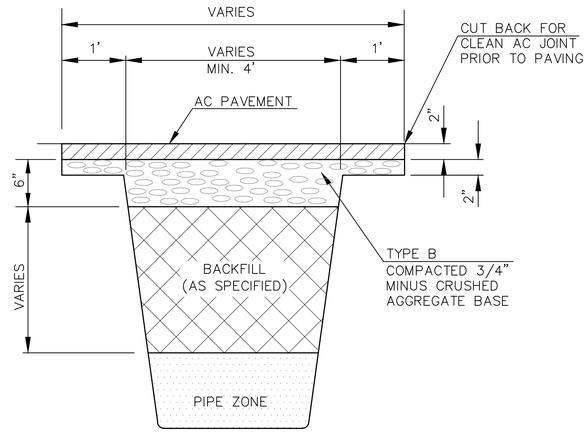

PARKING LOT/DRIVEWAY ASPHALT SURFACE

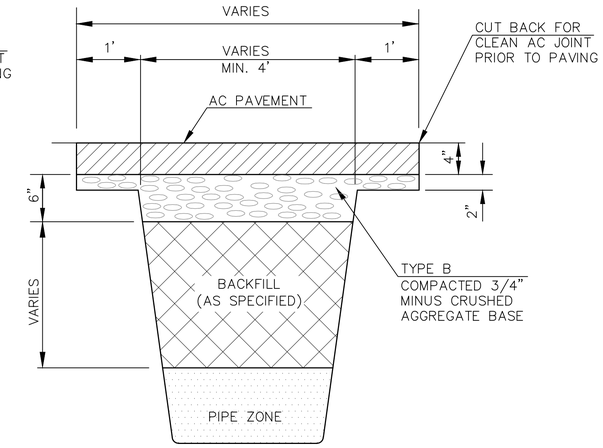

ONTARIO STREET ASPHALT SURFACE

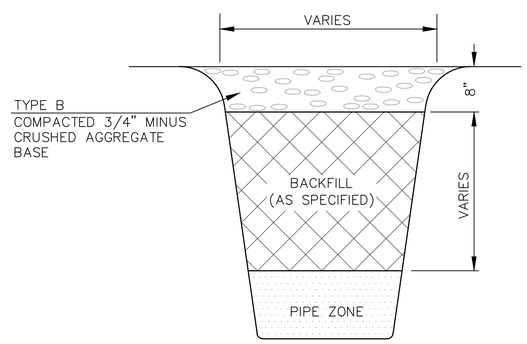

GRAVEL SURFACE

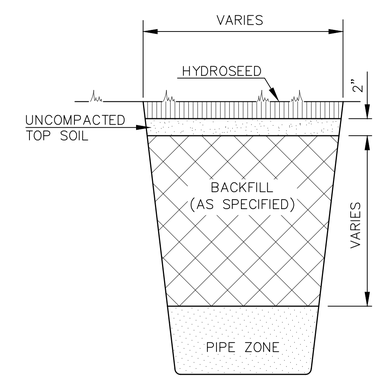

HYDROSEED SURFACE

NOTES:

1. ALL TRENCH SIDES TO BE AT A SAFE SLOPE.
2. SURFACE RESTORATION TYPES SHALL BE AS SPECIFIED IN THE 2017 VERSION OF I.S.P.W.C.
3. SAWCUT EDGES AFTER WORK HAS BEEN COMPLETED PRIOR TO PAVING.

TRENCH BACKFILL AND SURFACE RESTORATION DETAIL (2 / C2.2)

NO SCALE

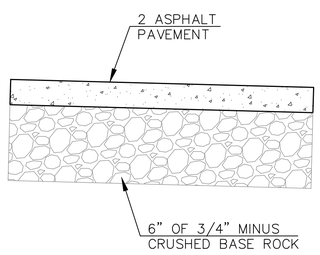

ASPHALT DRIVEWAY DETAIL (3 / C2.2)

NO SCALE

COPYRIGHT BERNARDO WILLS ARCHITECTS.PC 2013

PROFESSIONAL ENGINEER LICENSED 7898 STATE OF IDAHO PHILIP T. BOND 02/18/20

WELCH-COMER ENGINEERS | SURVEYORS
www.welchcomer.com
2300 Lakeside Blvd., Suite 101
Coeur d'Alene, ID 83814
208-664-5832
(toll free) 877-664-5832
(fax) 208-664-5946

153 SOUTH JEFFERSON SPOKANE WASHINGTON 99201 509.838.4511 FAX 509.838.4605 WWW.BERNARDOWILLS.COM

BID SET

CIVIL DETAILS

War Memorial Field Improvements - Phase I

801 Ontario Street
Sandpoint, Idaho 83864

BERNARDO | WILLS ARCHITECTS PC

BWA

Project No: 19-10-207
Drawn by:
Date: 02-18-2020

C2.2

N:\Civil3D Projects\44045\000\Production Drawings\44045-000-01C.dwg, 2/18/2020 8:52:58 AM, Jake, 1:1

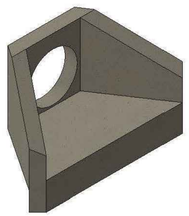

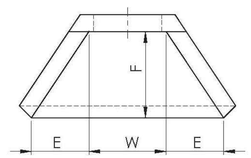

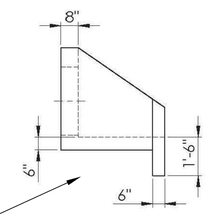

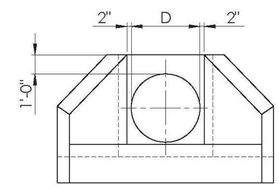

OVER EXCAVATE 2' AND PLACE MIRAFI MIRAGRID XL AND 2' OF COMPACTED 2" FRACTURED ROCK

PRODUCT #	D	L	E	F	W
4016-15	15"	1'-9 5/8"	1'-0"	1'-6"	1'-9"
4016-18	18"	2'-3 1/8"	1'-3"	1'-10 1/2"	2'-0"
4016-24	24"	3'-1 7/8"	1'-9"	2'-7 1/2"	2'-6"
4016-30	30"	4'-0 5/8"	2'-3"	3'-4 1/2"	3'-0"
4016-36	36"	4'-11 1/2"	2'-9"	4'-1 1/2"	3'-6"
4016-42	42"	5'10 1/4"	3'-3"	4'-10 1/2"	4'-0"
4016-48	48"	6'-9 1/8"	3'-9"	5'-7 1/2"	4'-6"

NOTES:
~ #4 REBAR @ 12" O.C.E.W. THROUGHOUT
~ MEETS OR EXCEEDS THE REQUIREMENTS OF ASTM C-478 / AASHTO M-199
~ OTHER SIZES AVAILABLE FOR LARGER PIPE DIAMETERS

WILBERT-WING WALL/HEADWALL (MODEL #4016S)

1 / C2.3

NO SCALE

NOTE:
CONTRACTOR SHALL INSTALL 2 INCH GALVANIZED GRATE ON OUTLET.

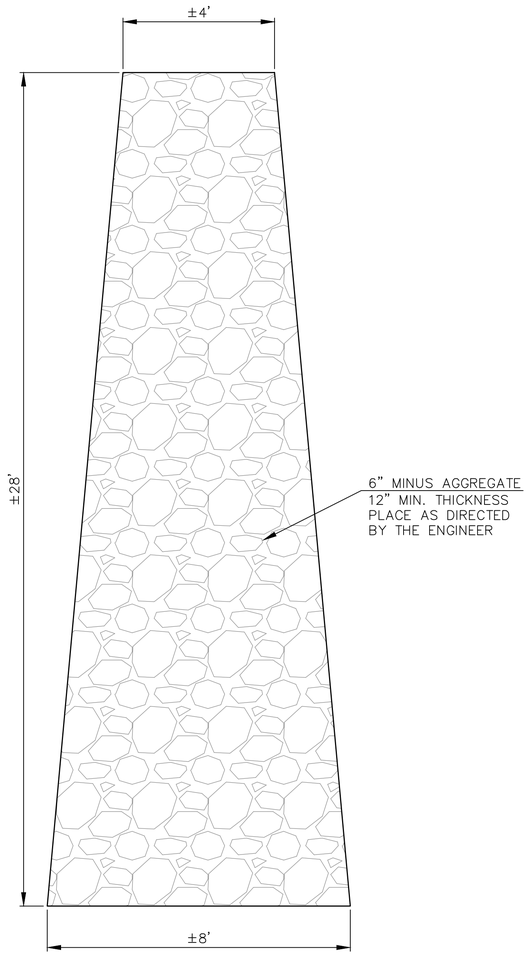

RIP RAP OUTFALL DETAIL

2 / C2.3

NO SCALE

COPYRIGHT BERNARDO WILLS ARCHITECTS.PC 2013

PROFESSIONAL ENGINEER LICENSED 7898 STATE OF IDAHO PHILIP T. BOYD
02/18/20

WELCH-COMER ENGINEERS | SURVEYORS
www.welchcomer.com
2301 Lakeside Drive, Suite 101
Coeur d'Alene, ID 83814
208-664-5832
(toll free) 877-664-5832
(fax) 208-664-5946

153 SOUTH JEFFERSON SPOKANE WASHINGTON 99201
509.838.4511 FAX 509.838.4605 WWW.BERNARDOWILLS.COM

BID SET

CIVIL DETAILS

War Memorial Field
Improvements - Phase I

801 Ontario Street
Sandpoint, Idaho 83864

BWA BERNARDO | WILLS ARCHITECTS PC

Project No: 19-10-207
Drawn by:
Date: 02-18-2020

C2.3

N:\CivilSD Projects\44045.000\Production Drawings\44045.000\0101.dwg, 2/19/2020 3:24:43 PM, Jude, 1:1

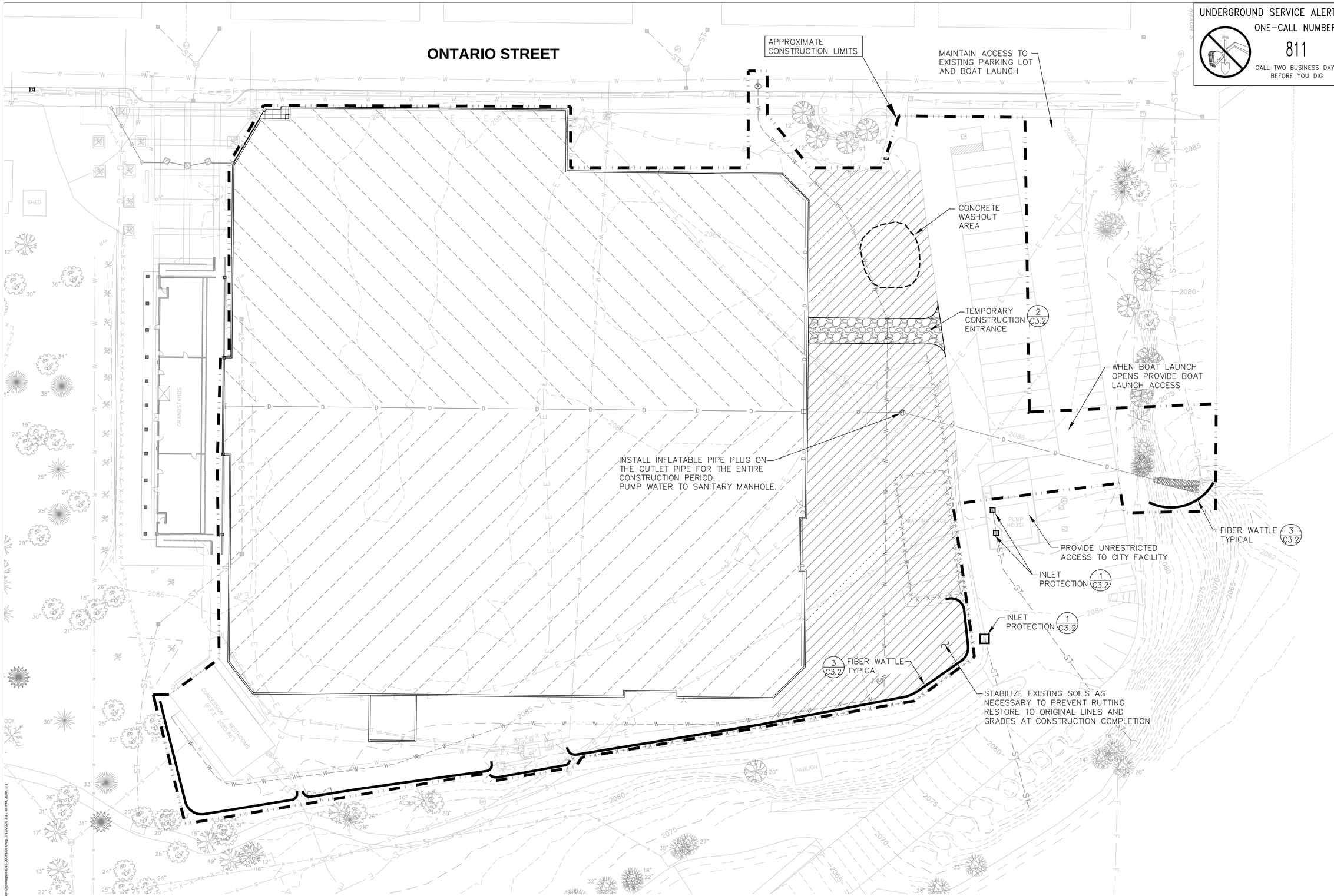

UNDERGROUND SERVICE ALERT
ONE-CALL NUMBER
811
CALL TWO BUSINESS DAYS BEFORE YOU DIG

NORTH

0 30 60

EROSION CONTROL PLAN

SCALE: 1" = 30'-0"

NOTES

1. CONTRACTOR SHALL COMPLY WITH STORMWATER POLLUTION PREVENTION PLAN.

PROFESSIONAL ENGINEER LICENSED 5898 STATE OF IDAHO PHILIP T. BOYD 02/18/20

COPYRIGHT BERNARDO WILLS ARCHITECTS,PC 2013

WELCH-COMER ENGINEERS | SURVEYORS
www.welchcomer.com
2200 N. Lakewood Drive, Suite 101
Coeur d'Alene, ID 83814
208-664-5832
toll free 877-664-5832
fax 208-664-5946

153 SOUTH JEFFERSON SPOKANE WASHINGTON 99201
509.838.4511 FAX 509.838.4605 WWW.BERNARDOWILLS.COM

BERNARDO | WILLS ARCHITECTS PC
B W A

BID SET

War Memorial Field Improvements - Phase I

801 Ontario Street
Sandpoint, Idaho 83864

Project No: 19-10-207
Drawn by:
Date: 02-18-2020

C3.1

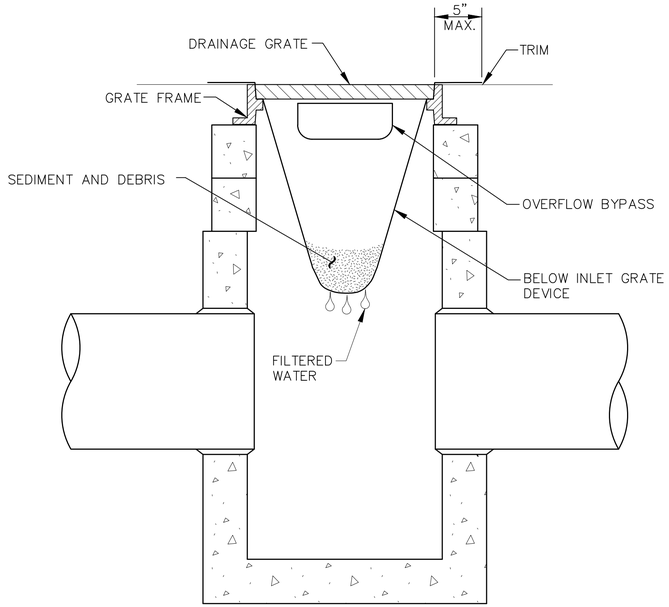

SECTION VIEW

NO SCALE

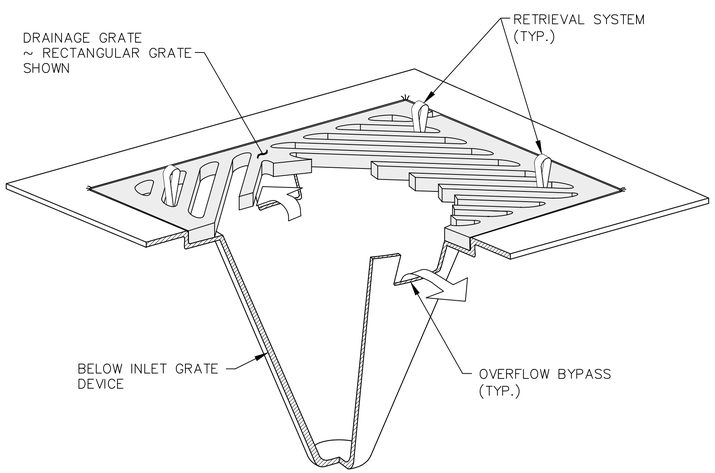

ISOMETRIC VIEW

NO SCALE

NOTES:

1. SIZE THE BELOW INLET GRATE DEVICE (BIGD) FOR THE STORM WATER STRUCTURE IT WILL SERVICE.
2. THE BIGD SHALL HAVE A BUILT-IN HIGH-FLOW RELIEF SYSTEM (OVERFLOW BYPASS).
3. THE RETRIEVAL SYSTEM MUST ALLOW REMOVAL OF THE BIGD WITHOUT SPILLING THE COLLECTED MATERIAL.
4. PERFORM MAINTENANCE IN ACCORDANCE WITH SWPPP.

STORM DRAIN INLET PROTECTION DETAIL

1 / C3.2

NO SCALE

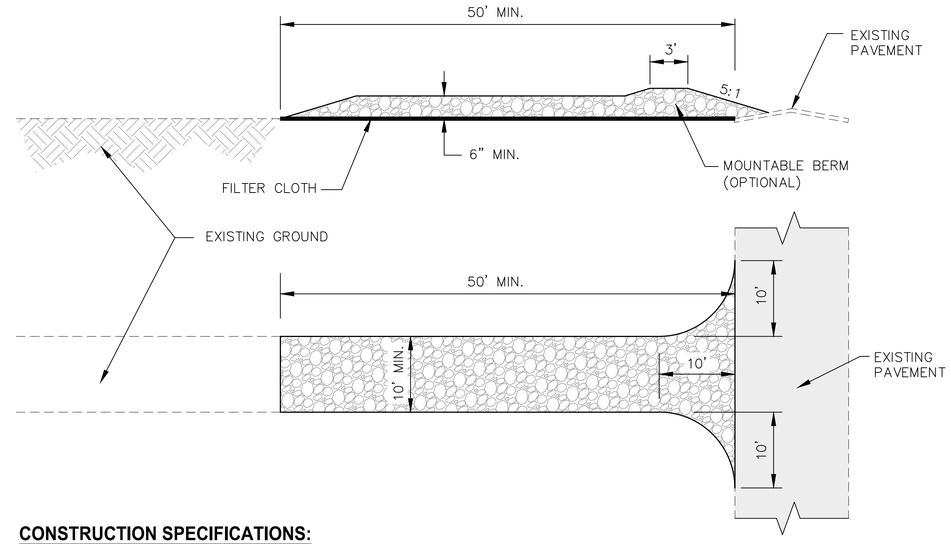

CONSTRUCTION SPECIFICATIONS:

1. STONE SIZE – USE 2 INCH STONE OR RECLAIMED OR RECYCLED CONCRETE EQUIVALENT.
2. LENGTH – AS REQUIRED, BUT NOT LESS THAN 50 FEET, EXCEPT ON SINGLE RESIDENCE LOT WHERE 30 FOOT MIN. LENGTH WOULD APPLY.
3. THICKNESS – NOT LESS THAN 6 INCHES.
4. WIDTH – 10 FOOT MIN., BUT NOT LESS THAN FULL WIDTH AT POINTS WHERE INGRESS OR EGRESS OCCURS.
5. FILTER CLOTH – WILL BE PLACED OVER THE ENTIRE AREA PRIOR TO PLACING OF STONE. FILTER WILL NOT BE REQUIRED ON A SINGLE FAMILY RESIDENCE LOT.
6. SURFACE WATER – ALL SURFACE WATER FLOWING OR DIVERTED TOWARD CONSTRUCTION ENTRANCES SHALL BE PIPED ACROSS THE ENTRANCE. IF PIPING IS IMPRACTICAL, A MOUNTABLE BERM WITH 5:1 SLOPES WILL BE PERMITTED.
7. MAINTENANCE – THE ENTRANCE SHALL BE MAINTAINED IN A CONDITION WHICH WILL PREVENT TRACKING OR FLOWING OF SEDIMENT ONTO PUBLIC RIGHT-OF-WAY. THIS MAY REQUIRE PERIODIC TOP DRESSING WITH ADDITIONAL STONE AS CONDITIONS DEMAND AND REPAIR AND/OR CLEANOUT OF ANY MEASURES USED TO TRAP SEDIMENT. ALL SEDIMENT SPILLED, DROPPED, WASHED OR TRACKED ONTO PUBLIC RIGHT-OF-WAY MUST BE REMOVED IMMEDIATELY.
8. WASHING – WHEELS SHALL BE CLEANED TO REMOVE SEDIMENT PRIOR TO ENTRANCE ONTO PUBLIC RIGHT-OF-WAY. WHEN WASHING IS REQUIRED, IT SHALL BE DONE ON AN AREA STABILIZED WITH STONE AND WHICH DRAINS INTO AN APPROVED SEDIMENT TRAPPING DEVICE.
9. PERIODIC INSPECTION AND NEEDED MAINTENANCE SHALL BE PROVIDED AFTER EACH RAIN.

STABILIZED CONSTRUCTION ENTRANCE DETAIL

2 / C3.2

NO SCALE

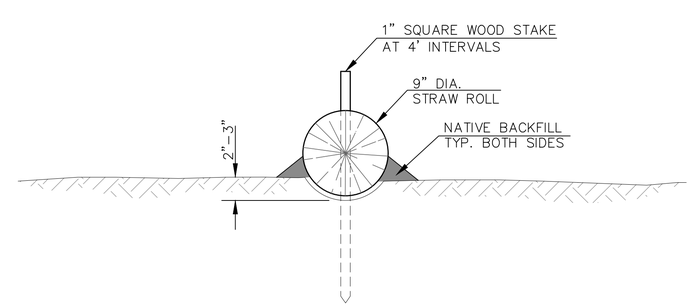

WATTLE INSTALLATION DETAIL

3 / C3.2

NO SCALE

COPYRIGHT BERNARDO WILLS ARCHITECTS.PC 2013

PROFESSIONAL ENGINEER LICENSED 7898 STATE OF IDAHO PHILIP T. BOYD 02/18/20

WELCH-COMER ENGINEERS | SURVEYORS
www.welchcomer.com
2300 N. Lakewood Drive, Suite 101
Coeur d'Alene, ID 83814
208-664-5832
(toll free) 877-841-5872
(fax) 208-664-5946

153 SOUTH JEFFERSON SPOKANE WASHINGTON 99201 509.838.4511 FAX 509.838.4605 WWW.BERNARDOWILLS.COM

BID SET

EROSION CONTROL DETAILS

War Memorial Field
Improvements - Phase I

801 Ontario Street
Sandpoint, Idaho 83864

BERNARDO | WILLS
ARCHITECTS PC

Project No: 19-10-207
Drawn by:
Date: 02-18-2020

C3.2

R:\Civil\BD Projects\4245.000\Production Drawings\4245.000\0701.dwg, 2/18/2020 8:52:26 AM, AM, 1:1

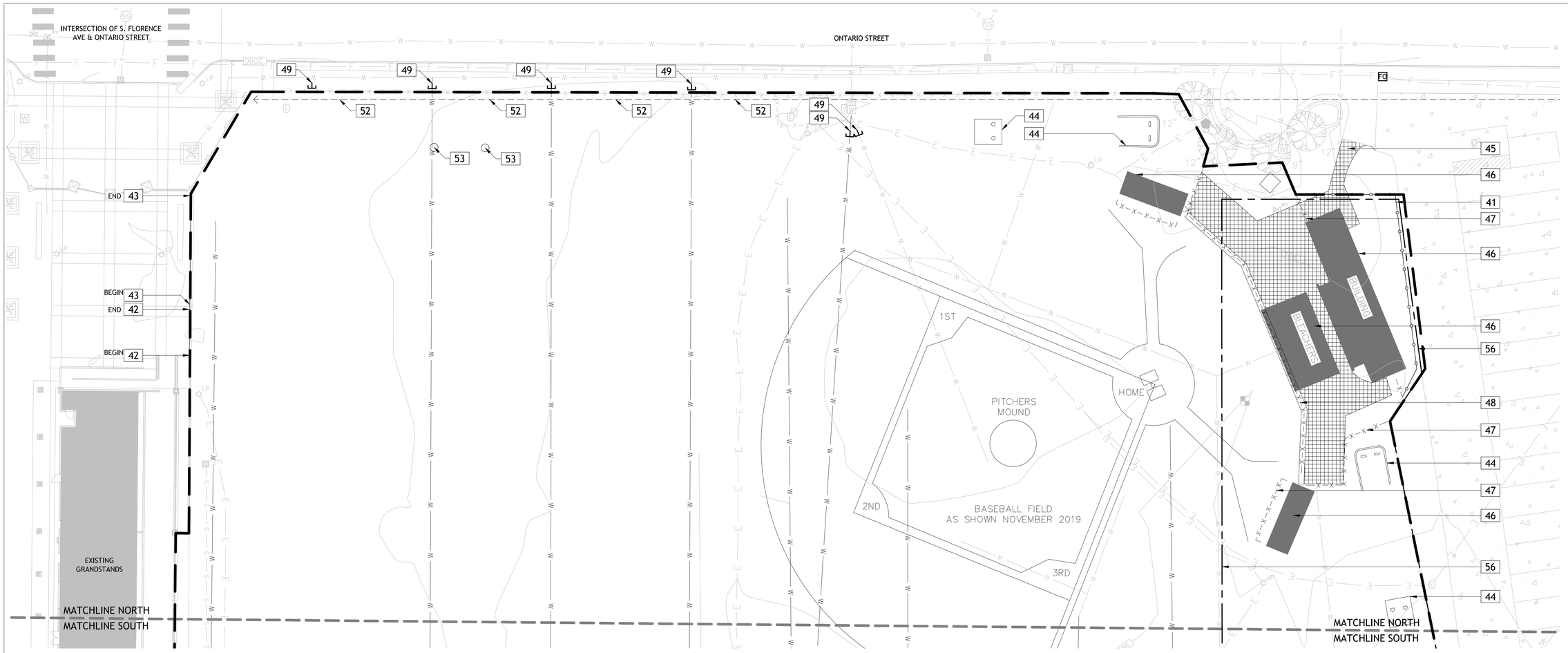

DEMOLITION LEGEND

SYMBOL	DESCRIPTION	QTY
39	PROTECT EXISTING CONCRETE FLATWORK IN PLACE	1,005 SF
40	CUT EXISTING BATTING CAGE POLES AT FOUNDATION. DELIVER POLES TO OWNER AND DEMOLISH REMAINING BATTING CAGE STURCTURE AND FOOTINGS AND DISPOSE OF PROPERLY OFF-SITE	2,794 SF
41	8FT HT. TEMPORARY CHAINLINK CONSTRUCTION FENCE	130 LF
42	SAWCUT & REMOVE (12") WIDE BAND OF EXISTING CONCRETE TO ALLOW FOR NEW SYNTHETIC TURF CONCRETE EDGE TYPE VII. SALVAGE EXISTING BOLLARDS FOR RE-USE	19 LF
43	SAWCUT & REMOVE (12") WIDE BAND OF EXISTING ASPHALT TO ALLOW FOR NEW SYNTHETIC TURF CONCRETE EDGE TYPE VII. SALVAGE EXISTING BOLLARDS FOR RE-USE	43 LF
44	REMOVE EXISTING WARM UP AMENITIES	
45	REMOVE EXISTING CONCRETE FLATWORK	2,476 SF
46	REMOVE EXISTING STRUCTURE & ANY ASSOCIATED FOOTINGS	
47	REMOVE EXISTING CHAINLINK FENCE	
48	REMOVE EXISTING BACKSTOP FENCING & CONCRETE WALL/FOOTING	
49	REMOVE & CAP EXISTING IRRIGATION LINES, TYP.	
50	APPROXIMATE PROJECT EXTENTS LIMIT LINE	1,840 LF
52	EXISTING UNDERGROUND AVISTA PRIMARY POWER LINE. FIELD VERIFY AND PROTECT	
53	REMOVE EXISTING FOOTBALL FIELD GOALS AND DISPOSE OF PROPERLY OFF-SITE	
54	EXISTING VICTORY BELL RESIDUAL DEBRIS TO REMOVE AND DISPOSE OF PROPERLY OFF-SITE	
55	APPROXIMATE AREA OF IDENTIFIED UNSUITABLE FILL MATERIALS BASED ON GEOTECHNICAL REPORT. ANY DEBRIS ENCOUNTERED SHALL BE INCLUDED AS INCIDENTAL TO THE PROJECT.	24,050 SF
56	APPROXIMATE LIMITS OF CONTRACTOR STAGING AREA	

**** ALL QUANTITIES PROVIDED SHALL BE CONFIRMED BY CONTRACTOR AND ARE SHOWN FOR REFERENCE ONLY. IN THE CASE OF A DISCREPANCY BETWEEN THE SCHEDULE AND PLAN, THE PLAN LOCATION(S) SHALL DICTATE QUANTITY.****

DEMOLITION NOTES

1. CONTRACTOR SHALL MAINTAIN THE CONSTRUCTION SITE IN ACCORDANCE WITH ALL LOCAL, STATE, AND FEDERAL HEALTH AND SAFETY STANDARDS FOR THE DURATION OF CONSTRUCTION.
2. CONTRACTOR TO FIELD VERIFY WITH OWNER'S REPRESENTATIVE ALL DIMENSIONS, SITE ELEVATIONS, PROPERTY LINES AND DEMO EXTENTS PRIOR TO THE COMMENCEMENT OF WORK. THE LANDSCAPE ARCHITECT IS TO BE NOTIFIED IMMEDIATELY OF ANY ERRORS, INCONSISTENCIES OR OMISSIONS ON THE PLANS OR SPECIFICATIONS PRIOR TO COMMENCEMENT OF WORK IN THE AFFECTED WORK AREA.
3. CONTRACTOR IS RESPONSIBLE FOR ALL MEANS AND METHODS OF FIELD AND SITE CONSTRUCTION PER CONTRACT DOCUMENTS.
4. CONTRACTOR SHALL REFER TO PROJECT SPECIFICATIONS FOR ADDITIONAL REQUIREMENTS.
5. VERIFY LOCATION OF ALL UTILITIES PRIOR TO INITIATION OF ANY DEMOLITION OR CONSTRUCTION OPERATIONS. ANY DAMAGE TO EXISTING UTILITIES ON-SITE OR ADJACENT PROPERTY SHALL BE CONTRACTOR'S RESPONSIBILITY TO CORRECT.
6. ALL TURF AREAS IMPACTED BY DEMOLITION OR CONSTRUCTION SHALL BE REPAIRED. TOP DRESS WITH APPROVED TOPSOIL AND MATCH EXISTING ADJACENT GRADES. INSTALL NEW TURF PER PLANTING PLAN(S) AND SPECIFICATIONS.
7. PROTECT ALL EXISTING IRRIGATION TO REMAIN.
8. CONTRACTOR SHALL MAINTAIN IRRIGATION TO EXISTING LANDSCAPE TO REMAIN AND KEEP OPERABLE THROUGHOUT THE DURATION OF CONSTRUCTION. ANY DAMAGE SHALL BE REPAIRED WITHIN 48 HRS. TO PREVENT DAMAGE OR LOSS TO EXISTING LANDSCAPE.
9. IN THE EVENT OF A DISCREPANCY, IMMEDIATELY NOTIFY LANDSCAPE ARCHITECT.
10. CONTRACTOR TO REMOVE EXISTING UNDERGROUND LIGHTING COMPONENTS WITHIN AREAS OF DEMOLITION. PROTECT CIRCUITING AT DEMOLITION LIMITS FOR EXTENSIONS TO NEW LIGHTING LOCATIONS.
11. CONTRACTOR SHALL BE HELD RESPONSIBLE FOR ANY DAMAGE TO/OR DEFACING OF NEW OR EXISTING CONCRETE FLATWORK, ASPHALT, TURF AREAS, AND ANY OTHER EXISTING OR NEW SITE ELEMENTS AS A RESULT OF CONSTRUCTION ACTIVITIES.
12. WASHOUT AREA SHALL NOT BE LOCATED NEAR OR DRAINING INTO A STORM DRAINAGE AREA, TREATMENT AREA OR FACILITY.
13. CONTRACTOR TO MAINTAIN EMERGENCY VEHICLE ACCESS TO ALL AREAS ON-SITE DURING CONSTRUCTION.
14. CONTRACTOR SHALL MAINTAIN A CLEAN & ORDERLY CONSTRUCTION WORK AREA AND SHALL CONTROL DUST AND EROSION IN ACCORDANCE WITH STANDARD PRACTICE.
15. UTILITIES ARE APPROXIMATE. COORDINATE WITH OWNER'S REPRESENTATIVE.
16. SEE ELECTRICAL DEMOLITION PLAN SHEET E1.1 AND CIVIL DEMOLITION PLAN SHEET D1.1.

1 DEMOLITION PLAN (NORTH)

SCALE: 1" = 20'-0" @ 22"x34" (FULL SIZE) | 1" = 40'-0" @ 11"x17" (HALF SIZE)

0 20 40 60

NORTH

UNDERGROUND SERVICE ALERT
ONE-CALL NUMBER
811 OR
(800)342-1585
CALL TWO BUSINESS DAYS BEFORE YOU DIG

COPYRIGHT BERNARDO WILLS ARCHITECTS,PC 2013

STATE OF IDAHO
CARROLL R HAGEN
LICENSED LANDSCAPE ARCHITECT
LA-150
02-18-20

153 SOUTH JEFFERSON SPOKANE WASHINGTON 99201 509.838.4511 FAX 509.838.4605 WWW.BERNARDOWILLS.COM

BIDS SET
DEMOLITION PLAN
NORTH

War Memorial Field
Improvements - Phase I

801 Ontario Street
Sandpoint, Idaho 83864

BERNARDO | WILLS
ARCHITECTS PC

Project No: 19-10-207
Drawn by:
Date: 02-18-2020

L0.0

DEMOLITION LEGEND

SYMBOL	DESCRIPTION	QTY
39	PROTECT EXISTING CONCRETE FLATWORK IN PLACE	1,005 SF
40	CUT EXISTING BATTING CAGE POLES AT FOUNDATION. DELIVER POLES TO OWNER AND DEMOLISH REMAINING BATTING CAGE STURCTURE AND FOOTINGS AND DISPOSE OF PROPERLY OFF-SITE	2,794 SF
41	8FT HT. TEMPORARY CHAINLINK CONSTRUCTION FENCE	130 LF
42	SAWCUT & REMOVE (12") WIDE BAND OF EXISTING CONCRETE TO ALLOW FOR NEW SYNTHETIC TURF CONCRETE EDGE TYPE VII. SALVAGE EXISTING BOLLARDS FOR RE-USE	19 LF
43	SAWCUT & REMOVE (12") WIDE BAND OF EXISTING ASPHALT TO ALLOW FOR NEW SYNTHETIC TURF CONCRETE EDGE TYPE VII. SALVAGE EXISTING BOLLARDS FOR RE-USE	43 LF
44	REMOVE EXISTING WARM UP AMENITIES	
45	REMOVE EXISTING CONCRETE FLATWORK	2,476 SF
46	REMOVE EXISTING STRUCTURE & ANY ASSOCIATED FOOTINGS	
47	REMOVE EXISTING CHAINLINK FENCE	
48	REMOVE EXISTING BACKSTOP FENCING & CONCRETE WALL/FOOTING	
49	REMOVE & CAP EXISTING IRRIGATION LINES, TYP.	
50	APPROXIMATE PROJECT EXTENTS LIMIT LINE	1,840 LF
52	EXISTING UNDERGROUND AVISTA PRIMARY POWER LINE. FIELD VERIFY AND PROTECT	
53	REMOVE EXISTING FOOTBALL FIELD GOALS AND DISPOSE OF PROPERLY OFF-SITE	
54	EXISTING VICTORY BELL RESIDUAL DEBRIS TO REMOVE AND DISPOSE OF PROPERLY OFF-SITE	
55	APPROXIMATE AREA OF IDENTIFIED UNSUITABLE FILL MATERIALS BASED ON GEOTECHNICAL REPORT. ANY DEBRIS ENCOUNTERED SHALL BE INCLUDED AS INCIDENTAL TO THE PROJECT.	24,050 SF
56	APPROXIMATE LIMITS OF CONTRACTOR STAGING AREA	

**** ALL QUANTITIES PROVIDED SHALL BE CONFIRMED BY CONTRACTOR AND ARE SHOWN FOR REFERENCE ONLY. IN THE CASE OF A DISCREPANCY BETWEEN THE SCHEDULE AND PLAN, THE PLAN LOCATION(S) SHALL DICTATE QUANTITY.****

DEMOLITION NOTES

1. CONTRACTOR SHALL MAINTAIN THE CONSTRUCTION SITE IN ACCORDANCE WITH ALL LOCAL, STATE, AND FEDERAL HEALTH AND SAFETY STANDARDS FOR THE DURATION OF CONSTRUCTION.
2. CONTRACTOR TO FIELD VERIFY WITH OWNER'S REPRESENTATIVE ALL DIMENSIONS, SITE ELEVATIONS, PROPERTY LINES AND DEMO EXTENTS PRIOR TO THE COMMENCEMENT OF WORK. THE LANDSCAPE ARCHITECT IS TO BE NOTIFIED IMMEDIATELY OF ANY ERRORS, INCONSISTENCIES OR OMISSIONS ON THE PLANS OR SPECIFICATIONS PRIOR TO COMMENCEMENT OF WORK IN THE AFFECTED WORK AREA.
3. CONTRACTOR IS RESPONSIBLE FOR ALL MEANS AND METHODS OF FIELD AND SITE CONSTRUCTION PER CONTRACT DOCUMENTS.
4. CONTRACTOR SHALL REFER TO PROJECT SPECIFICATIONS FOR ADDITIONAL REQUIREMENTS.
5. VERIFY LOCATION OF ALL UTILITIES PRIOR TO INITIATION OF ANY DEMOLITION OR CONSTRUCTION OPERATIONS. ANY DAMAGE TO EXISTING UTILITIES ON-SITE OR ADJACENT PROPERTY SHALL BE CONTRACTOR'S RESPONSIBILITY TO CORRECT.
6. ALL TURF AREAS IMPACTED BY DEMOLITION OR CONSTRUCTION SHALL BE REPAIRED. TOP DRESS WITH APPROVED TOPSOIL AND MATCH EXISTING ADJACENT GRADES. INSTALL NEW TURF PER PLANTING PLAN(S) AND SPECIFICATIONS.
7. PROTECT ALL EXISTING IRRIGATION TO REMAIN.
8. CONTRACTOR SHALL MAINTAIN IRRIGATION TO EXISTING LANDSCAPE TO REMAIN AND KEEP OPERABLE THROUGHOUT THE DURATION OF CONSTRUCTION. ANY DAMAGE SHALL BE REPAIRED WITHIN 48 HRS. TO PREVENT DAMAGE OR LOSS TO EXISTING LANDSCAPE.
9. IN THE EVENT OF A DISCREPANCY, IMMEDIATELY NOTIFY LANDSCAPE ARCHITECT.
10. CONTRACTOR TO REMOVE EXISTING UNDERGROUND LIGHTING COMPONENTS WITHIN AREAS OF DEMOLITION. PROTECT CIRCUITING AT DEMOLITION LIMITS FOR EXTENSIONS TO NEW LIGHTING LOCATIONS.
11. CONTRACTOR SHALL BE HELD RESPONSIBLE FOR ANY DAMAGE TO/OR DEFACING OF NEW OR EXISTING CONCRETE FLATWORK, ASPHALT, TURF AREAS, AND ANY OTHER EXISTING OR NEW SITE ELEMENTS AS A RESULT OF CONSTRUCTION ACTIVITIES.
12. WASHOUT AREA SHALL NOT BE LOCATED NEAR OR DRAINING INTO A STORM DRAINAGE AREA, TREATMENT AREA OR FACILITY.
13. CONTRACTOR TO MAINTAIN EMERGENCY VEHICLE ACCESS TO ALL AREAS ON-SITE DURING CONSTRUCTION.
14. CONTRACTOR SHALL MAINTAIN A CLEAN & ORDERLY CONSTRUCTION WORK AREA AND SHALL CONTROL DUST AND EROSION IN ACCORDANCE WITH STANDARD PRACTICE.
15. UTILITIES ARE APPROXIMATE. COORDINATE WITH OWNER'S REPRESENTATIVE.
16. SEE ELECTRICAL DEMOLITION PLAN SHEET E1.1 AND CIVIL DEMOLITION PLAN SHEET D1.1.

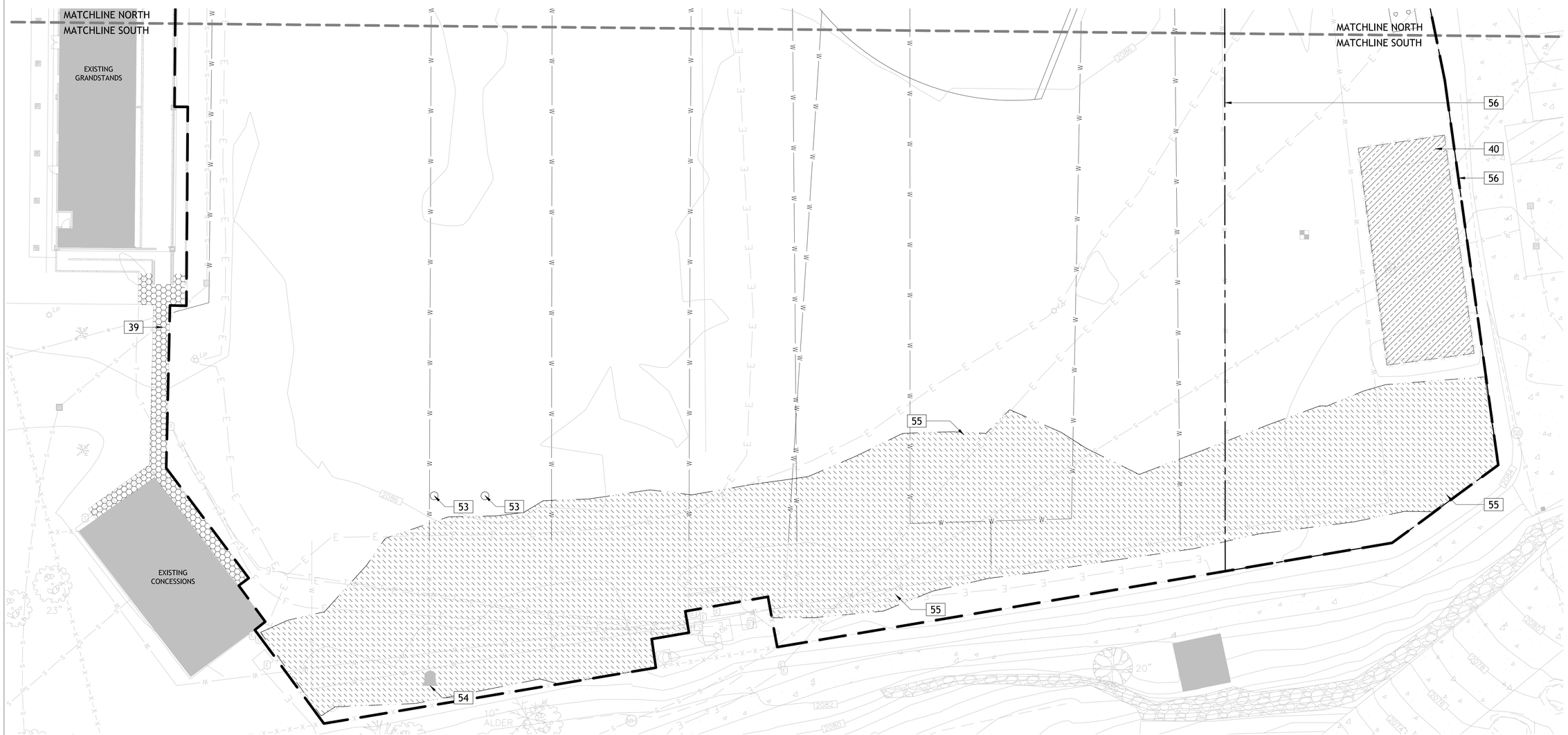

1 DEMOLITION PLAN (SOUTH)

SCALE: 1" = 20'-0" @ 22"x34" (FULL SIZE) | 1" = 40'-0" @ 11"x17" (HALF SIZE)

UNDERGROUND SERVICE ALERT
ONE-CALL NUMBER
811 OR
(800)342-1585
CALL TWO BUSINESS DAYS BEFORE YOU DIG

COPYRIGHT BERNARDO WILLS ARCHITECTS,PC 2013

STATE OF IDAHO
CHRISTOPHER GRALL R. HARTEN
LA-150
02-18-20
LICENSED LANDSCAPE ARCHITECT

153 SOUTH JEFFERSON SPOKANE WASHINGTON 99201 509.838.4511 FAX 509.838.4605 WWW.BERNARDOWILLS.COM

BERNARDO | WILLS ARCHITECTS PC

BID SET
DEMOLITION PLAN
SOUTH

War Memorial Field
Improvements - Phase I

801 Ontario Street
Sandpoint, Idaho 83864

Project No: 19-10-207
Drawn by:
Date: 02-18-2020

L0.1

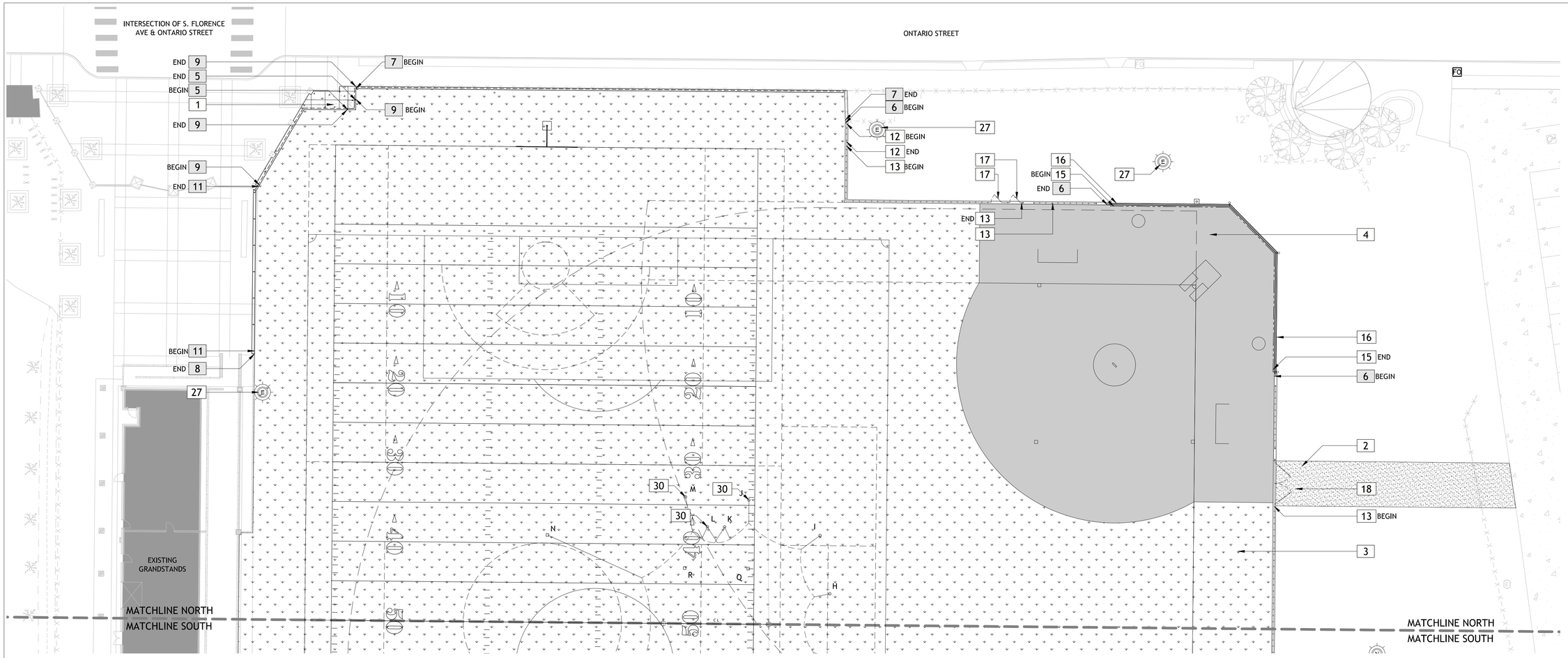

MATERIALS LEGEND

SYMBOL	DESCRIPTION	QTY
1	CONCRETE FLATWORK - SEE DETAIL #01&03/SHEET L6.0	156 SF
2	ASPHALT ACCESS ROAD - SEE CIVIL DETAIL(S)	1,525 SF
3	SYNTHETIC TURF FIELD W/ INFILL AS SPECIFIED. SEE CIVIL SHEETS FOR DRAINAGE. SEE DETAIL #01/SHEET L6.1	119,283 SF
4	SYNTHETIC TURF INFIELD W/ INFILL AS SPECIFIED. INFIELD COLOR SHALL BE AS SPECIFIED. SEE CIVIL SHEETS FOR DRAINAGE. SEE DETAIL #01/SHEET L6.1	24,880 SF
5	SYNTHETIC TURF EDGE - TYPE I. SEE DETAIL #02/SHEET L6.1	27 LF
6	SYNTHETIC TURF EDGE - TYPE II. SEE DETAIL #03/SHEET L6.1	585 LF
7	SYNTHETIC TURF EDGE - TYPE III. SEE DETAIL #04/SHEET L6.1	196 LF
8	SYNTHETIC TURF EDGE - TYPE IV. SEE DETAIL #05/SHEET L6.1	210 LF
9	SYNTHETIC TURF EDGE - TYPE V. SEE DETAIL #06/SHEET L6.1	56 LF
10	SYNTHETIC TURF EDGE - TYPE VI. SEE DETAIL #07/SHEET L6.1	163 LF
11	SYNTHETIC TURF EDGE - TYPE VII. SEE DETAIL #09/SHEET L6.1	64 LF
12	6FT. CHAINLINK FENCE. SEE SPECIFICATIONS & DETAIL #01/SHEET L6.2	24 LF
13	8FT. CHAINLINK FENCE. SEE SPECIFICATIONS & DETAIL #01/SHEET L6.2	370 LF
14	12FT. CHAINLINK FENCE. SEE SPECIFICATIONS & DETAIL #02/SHEET L6.2	175 LF
15	BACKSTOP NETTING. SEE SPECIFICATIONS & DETAIL #01-04/SHEET L6.3	240 LF
16	BACKSTOP WALL. SEE SPECIFICATIONS & DETAIL #01-04/SHEET L6.3	245 LF
17	NEW 8FT X 4FT WIDE SINGLE SWING CHAINLINK GATE - SEE DETAIL #03/SHEET L6.2	
18	NEW 8FT X 6FT WIDE BY 8FT X 10FT WIDE DOUBLE SWING CHAINLINK GATE W/ CANE STOP TO ALLOW PEDESTRIAN ACCESS ONLY IF DESIRED - SEE DETAIL #04/SHEET L6.2	
19	NEW 8FT X 14FT WIDE DOUBLE SWING CHAINLINK GATE. SEE SPECIFICATIONS & DETAIL #04/SHEET L6.2	
20	NEW 8FT X 8FT WIDE DOUBLE SWING CHAINLINK GATE. SEE SPECIFICATIONS & DETAIL #04/SHEET L6.2	
21	NEW 12FT X 14FT WIDE DOUBLE SWING CHAINLINK GATE. SEE SPECIFICATIONS & DETAIL #04/SHEET L6.2	
22	NEW 12FT X 4FT WIDE SINGLE SWING CHAINLINK GATE. SEE SPECIFICATIONS & DETAIL #03/SHEET L6.2	
23	NEW 12FT X 8FT WIDE SINGLE SWING CHAINLINK GATE. SEE SPECIFICATIONS & DETAIL #03/SHEET L6.2	
24	NEW 6FT X 16FT WIDE DOUBLE SWING CHAINLINK GATE. SEE SPECIFICATIONS & DETAIL #04/SHEET L6.2	
25	CONCRETE FOOTING FOR FUTURE PHASE II DUGOUT CONSTRUCTION. SEE DETAIL #06/SHEET L6.0	

SYMBOL	DESCRIPTION	QTY
26	RELOCATED FIELD LIGHT UPGRADED TO L.E.D. FIXTURES. SEE ELECTRICAL SHEETS & SPECIFICATIONS	2
27	EXISTING FIELD LIGHT TO REMAIN IN PLACE. UPGRADED TO L.E.D. FIXTURES. SEE ELECTRICAL SHEETS & SPECIFICATIONS	4
28	NEW FIELD LIGHT W/ L.E.D. FIXTURES. SEE ELECTRICAL SHEETS & SPECIFICATIONS	1
30	FESTIVAL TENT BELOW GROUND HELICAL PIER ANCHOR & SYNTHETIC TURF ACCESS BOX - SEE STRUCTURAL DETAIL #01/SHEET S4.1 & SPECIFICATIONS AND LANDSCAPE DETAILS #10&11/SHEET L6.1	
31	VICTORY BELL (BY OTHERS)	

SYMBOL	DESCRIPTION	QTY
51	SOD REPAIR AREA - SEE SPECIFICATIONS	9,789 SF

** ALL QUANTITIES PROVIDED SHALL BE CONFIRMED BY CONTRACTOR AND ARE SHOWN FOR REFERENCE ONLY. IN THE CASE OF A DISCREPANCY BETWEEN THE SCHEDULE AND PLAN, THE PLAN LOCATION(S) SHALL DICTATE QUANTITY.**

CONSTRUCTION NOTES

1. CONTRACTOR TO VERIFY LOCATION OF ALL UTILITIES PRIOR TO INITIATION OF ANY DEMOLITION OR CONSTRUCTION OPERATIONS. ANY DAMAGE TO EXISTING UTILITIES ON SITE OR ADJACENT PROPERTY SHALL BE CONTRACTOR'S RESPONSIBILITY TO CORRECT.
2. COORDINATE ALL DEMOLITION AND CONSTRUCTION OPERATION WITH ARCHITECTURAL, CIVIL AND ELECTRICAL ENGINEERING SHEETS.
3. COORDINATE INSTALLATION OF ELECTRICAL AND IRRIGATION CONDUIT AND SLEEVES WITH RESPECTIVE CONTRACTORS.
4. PROVIDE TOOLED SCORE JOINTS AS SHOWN ON PLANS. SCORE JOINTS ARE AN INTEGRAL PART OF THE DESIGN AND SHALL NOT VARY FROM PATTERNS AND LOCATIONS SHOWN. CONTRACTOR SHALL REMOVE ANY FLATWORK THAT DOES NOT CONFORM TO DESIGN.
5. CONTRACTOR SHALL REFER TO SPECIFICATIONS FOR ADDITIONAL REQUIREMENTS.
6. CONTRACTOR RESPONSIBLE FOR CORRECTING ANY DAMAGE TO NEW OR EXISTING CONCRETE FLATWORK, ASPHALT, TURF AREAS OR ANY OTHER EXISTING ELEMENTS AS A RESULT OF CONSTRUCTION ACTIVITIES.
7. IN THE EVENT OF A DISCREPANCY, IMMEDIATELY NOTIFY LANDSCAPE ARCHITECT.
8. ONCE TOPSOIL IS ADDED AND GRADE IS ESTABLISHED, NO ADDITIONAL EQUIPMENT IS ALLOWED ON THE LANDSCAPE AREAS TO PREVENT DAMAGE AND SOIL COMPACTION.

SPORT FIELD STRIPING COLORS

SPORT	COLOR
BASEBALL	WHITE
FOOTBALL	WHITE
LACROSSE	BLUE - 4" x 4" TICK MARKS AT PRIMARY LAYOUT CORNERS FOR FUTURE LINE PAINTING
SOCCER	YELLOW
SOFTBALL	WHITE

1 MATERIALS PLAN (NORTH)

SCALE: 1" = 20'-0" @ 22"x34" (FULL SIZE) | 1" = 40'-0" @ 11"x17" (HALF SIZE)

0 20 40 60

NORTH

UNDERGROUND SERVICE ALERT
ONE-CALL NUMBER
811 OR
(800)342-1585
CALL TWO BUSINESS DAYS BEFORE YOU DIG

COPYRIGHT BERNARDO WILLS ARCHITECTS,PC 2013

STATE OF IDAHO
DAVID R. HAGEN
LICENSED LANDSCAPE ARCHITECT
LA-150
02-18-20

BID SET
MATERIALS PLAN
NORTH

153 SOUTH JEFFERSON SPOKANE WASHINGTON 99201 509.838.4511 FAX 509.838.4605 WWW.BERNARDOWILLS.COM
B W A BERNARDO | WILLS ARCHITECTS PC

War Memorial Field Improvements - Phase I

801 Ontario Street
Sandpoint, Idaho 83864

Project No: 19-10-207
Drawn by:
Date: 02-18-2020

L1.0

MATERIALS LEGEND

SYMBOL	DESCRIPTION	QTY
1	CONCRETE FLATWORK - SEE DETAIL #01&03/SHEET L6.0	156 SF
2	ASPHALT ACCESS ROAD - SEE CIVIL DETAIL(S)	1,525 SF
3	SYNTHETIC TURF FIELD W/ INFILL AS SPECIFIED. SEE CIVIL SHEETS FOR DRAINAGE. SEE DETAIL #01/SHEET L6.1	119,283 SF
4	SYNTHETIC TURF INFIELD W/ INFILL AS SPECIFIED. INFIELD COLOR SHALL BE AS SPECIFIED. SEE CIVIL SHEETS FOR DRAINAGE. SEE DETAIL #01/SHEET L6.1	24,880 SF
5	SYNTHETIC TURF EDGE - TYPE I. SEE DETAIL #02/SHEET L6.1	27 LF
6	SYNTHETIC TURF EDGE - TYPE II. SEE DETAIL #03/SHEET L6.1	585 LF
7	SYNTHETIC TURF EDGE - TYPE III. SEE DETAIL #04/SHEET L6.1	196 LF
8	SYNTHETIC TURF EDGE - TYPE IV. SEE DETAIL #05/SHEET L6.1	210 LF
9	SYNTHETIC TURF EDGE - TYPE V. SEE DETAIL #06/SHEET L6.1	56 LF
10	SYNTHETIC TURF EDGE - TYPE VI. SEE DETAIL #07/SHEET L6.1	163 LF
11	SYNTHETIC TURF EDGE - TYPE VII. SEE DETAIL #09/SHEET L6.1	64 LF
12	6FT. CHAINLINK FENCE. SEE SPECIFICATIONS & DETAIL #01/SHEET L6.2	24 LF
13	8FT. CHAINLINK FENCE. SEE SPECIFICATIONS & DETAIL #01/SHEET L6.2	370 LF
14	12FT. CHAINLINK FENCE. SEE SPECIFICATIONS & DETAIL #02/SHEET L6.2	175 LF
15	BACKSTOP NETTING. SEE SPECIFICATIONS & DETAIL #01-04/SHEET L6.3	240 LF
16	BACKSTOP WALL. SEE SPECIFICATIONS & DETAIL #01-04/SHEET L6.3	245 LF
17	NEW 8FT X 4FT WIDE SINGLE SWING CHAINLINK GATE - SEE DETAIL #03/SHEET L6.2	
18	NEW 8FT X 6FT WIDE BY 8FT X 10FT WIDE DOUBLE SWING CHAINLINK GATE W/ CANE STOP TO ALLOW PEDESTRIAN ACCESS ONLY IF DESIRED - SEE DETAIL #04/SHEET L6.2	
19	NEW 8FT X 14FT WIDE DOUBLE SWING CHAINLINK GATE. SEE SPECIFICATIONS & DETAIL #04/SHEET L6.2	
20	NEW 8FT X 8FT WIDE DOUBLE SWING CHAINLINK GATE. SEE SPECIFICATIONS & DETAIL #04/SHEET L6.2	
21	NEW 12FT X 14FT WIDE DOUBLE SWING CHAINLINK GATE. SEE SPECIFICATIONS & DETAIL #04/SHEET L6.2	
22	NEW 12FT X 4FT WIDE SINGLE SWING CHAINLINK GATE. SEE SPECIFICATIONS & DETAIL #03/SHEET L6.2	
23	NEW 12FT X 8FT WIDE SINGLE SWING CHAINLINK GATE. SEE SPECIFICATIONS & DETAIL #03/SHEET L6.2	
24	NEW 6FT X 16FT WIDE DOUBLE SWING CHAINLINK GATE. SEE SPECIFICATIONS & DETAIL #04/SHEET L6.2	
25	CONCRETE FOOTING FOR FUTURE PHASE II DUGOUT CONSTRUCTION. SEE DETAIL #06/SHEET L6.0	

SYMBOL	DESCRIPTION	QTY
R	26 RELOCATED FIELD LIGHT UPGRADED TO L.E.D. FIXTURES. SEE ELECTRICAL SHEETS & SPECIFICATIONS	2
E	27 EXISTING FIELD LIGHT TO REMAIN IN PLACE. UPGRADED TO L.E.D. FIXTURES. SEE ELECTRICAL SHEETS & SPECIFICATIONS	4
N	28 NEW FIELD LIGHT W/ L.E.D. FIXTURES. SEE ELECTRICAL SHEETS & SPECIFICATIONS	1
	30 FESTIVAL TENT BELOW GROUND HELICAL PIER ANCHOR & SYNTHETIC TURF ACCESS BOX - SEE STRUCTURAL DETAIL #01/SHEET S4.1 & SPECIFICATIONS AND LANDSCAPE DETAILS #10&11/SHEET L6.1	
	31 VICTORY BELL (BY OTHERS)	

SYMBOL	DESCRIPTION	QTY
	51 SOD REPAIR AREA - SEE SPECIFICATIONS	9,789 SF

**** ALL QUANTITIES PROVIDED SHALL BE CONFIRMED BY CONTRACTOR AND ARE SHOWN FOR REFERENCE ONLY. IN THE CASE OF A DISCREPANCY BETWEEN THE SCHEDULE AND PLAN, THE PLAN LOCATION(S) SHALL DICTATE QUANTITY.****

CONSTRUCTION NOTES

1. CONTRACTOR TO VERIFY LOCATION OF ALL UTILITIES PRIOR TO INITIATION OF ANY DEMOLITION OR CONSTRUCTION OPERATIONS. ANY DAMAGE TO EXISTING UTILITIES ON SITE OR ADJACENT PROPERTY SHALL BE CONTRACTOR'S RESPONSIBILITY TO CORRECT.
2. COORDINATE ALL DEMOLITION AND CONSTRUCTION OPERATION WITH ARCHITECTURAL, CIVIL AND ELECTRICAL ENGINEERING SHEETS.
3. COORDINATE INSTALLATION OF ELECTRICAL AND IRRIGATION CONDUIT AND SLEEVES WITH RESPECTIVE CONTRACTORS.
4. PROVIDE TOOLED SCORE JOINTS AS SHOWN ON PLANS. SCORE JOINTS ARE AN INTEGRAL PART OF THE DESIGN AND SHALL NOT VARY FROM PATTERNS AND LOCATIONS SHOWN. CONTRACTOR SHALL REMOVE ANY FLATWORK THAT DOES NOT CONFORM TO DESIGN.
5. CONTRACTOR SHALL REFER TO SPECIFICATIONS FOR ADDITIONAL REQUIREMENTS.
6. CONTRACTOR RESPONSIBLE FOR CORRECTING ANY DAMAGE TO NEW OR EXISTING CONCRETE FLATWORK, ASPHALT, TURF AREAS OR ANY OTHER EXISTING ELEMENTS AS A RESULT OF CONSTRUCTION ACTIVITIES.
7. IN THE EVENT OF A DISCREPANCY, IMMEDIATELY NOTIFY LANDSCAPE ARCHITECT.
8. ONCE TOPSOIL IS ADDED AND GRADE IS ESTABLISHED, NO ADDITIONAL EQUIPMENT IS ALLOWED ON THE LANDSCAPE AREAS TO PREVENT DAMAGE AND SOIL COMPACTION.

SPORT FIELD STRIPING COLORS

SPORT	COLOR
BASEBALL	WHITE
FOOTBALL	WHITE
LACROSSE	BLUE - 4" x 4" TICK MARKS AT PRIMARY LAYOUT CORNERS FOR FUTURE LINE PAINTING
SOCCER	YELLOW
SOFTBALL	WHITE

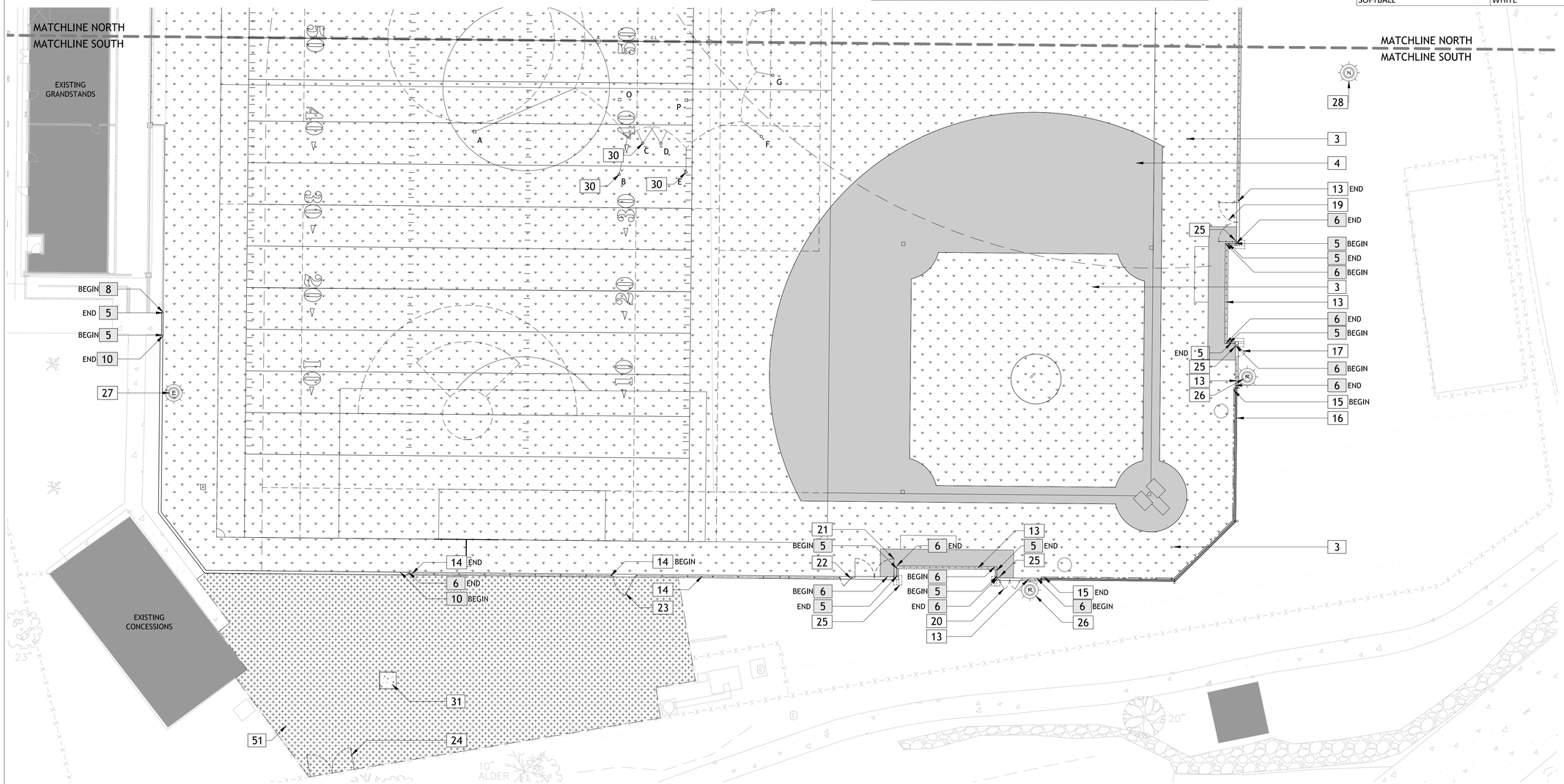

1 MATERIALS PLAN (SOUTH)

SCALE: 1" = 20'-0" @ 22"x34" (FULL SIZE) | 1" = 40'-0" @ 11"x17" (HALF SIZE)

0 20 40 60

NORTH

UNDERGROUND SERVICE ALERT
ONE-CALL NUMBER
811 OR
(800)342-1585
CALL TWO BUSINESS DAYS BEFORE YOU DIG

STATE OF IDAHO
SHELL R HAGEN
LICENSED LANDSCAPE ARCHITECT
LA-150
02-18-20

COPYRIGHT BERNARDO WILLS ARCHITECTS,PC 2013

153 SOUTH JEFFERSON SPOKANE WASHINGTON 98201 509.838.4511 FAX 509.838.4605 WWW.BERNARDOWILLS.COM

BWA BERNARDO | WILLS ARCHITECTS PC

BID SET
MATERIALS PLAN
SOUTH

War Memorial Field
Improvements - Phase I

801 Ontario Street
Sandpoint, Idaho 83864

Project No: 19-10-207
Drawn by:
Date: 02-18-2020

L1.1

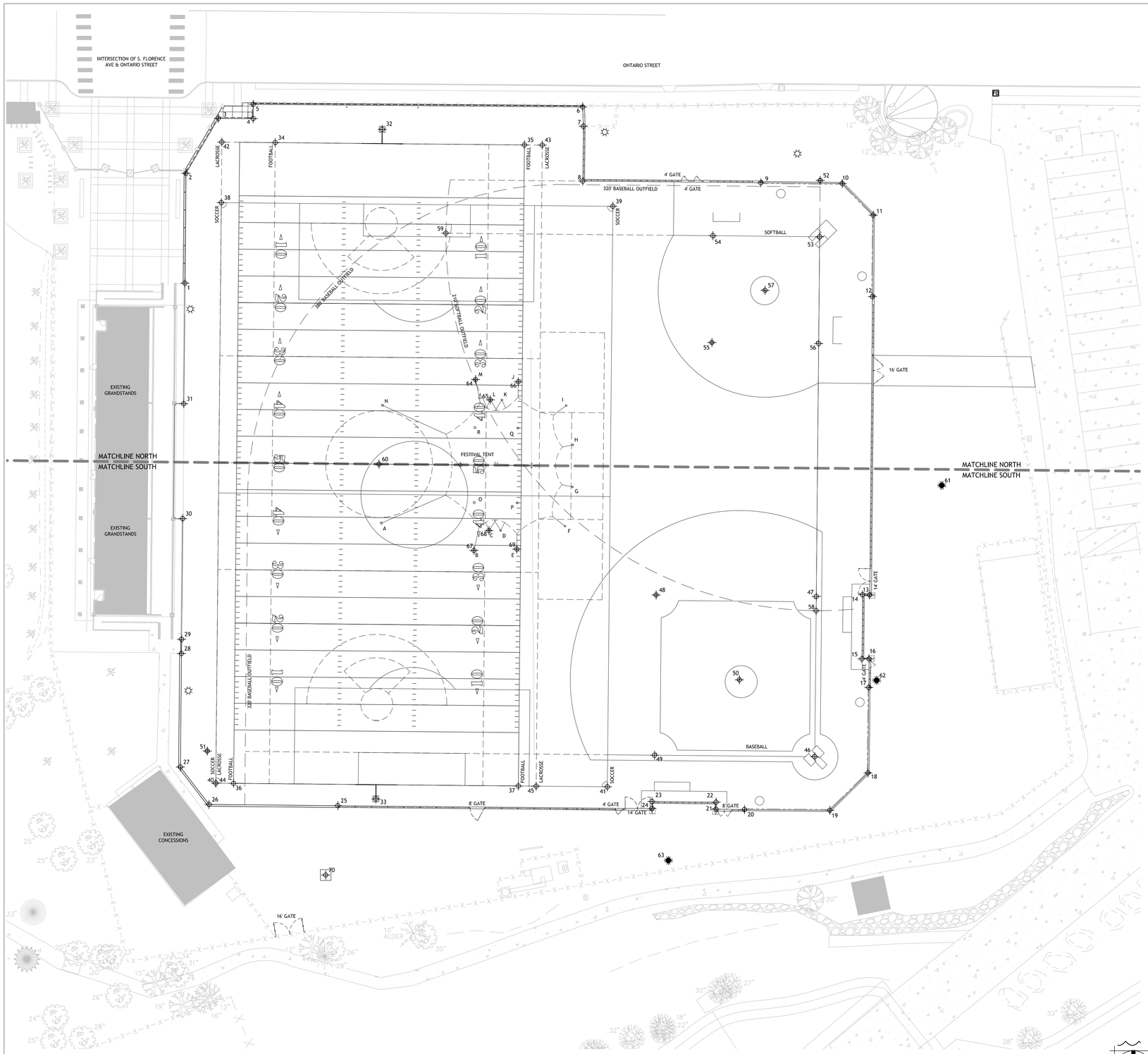

NORTHINGS AND EASTINGS POINT SCHEDULE

POINT	DESCRIPTION	NORTHING	EASTING
1	GRANDSTAND FACE	N 2406808.73	E 2427476.82
2	TURF EDGE FACE	N 2406870.37	E 2427477.39
3	TURF EDGE FACE	N 2406901.28	E 2427495.62
4	TURF EDGE FACE	N 2406901.11	E 2427515.17
5	TURF EDGE FACE	N 2406909.16	E 2427515.24
6	TURF EDGE FACE	N 2406907.66	E 2427700.34
7	TURF EDGE FACE	N 2406896.82	E 2427700.67
8	TURF EDGE FACE	N 2406866.05	E 2427700.38
9	BACKSTOP FACE	N 2406865.10	E 2427800.42
10	BACKSTOP FACE	N 2406864.67	E 2427846.17
11	BACKSTOP FACE	N 2406846.95	E 2427863.56
12	BACKSTOP FACE	N 2406801.20	E 2427863.13
13	TURF EDGE FACE	N 2406633.69	E 2427861.56
14	TURF EDGE FACE	N 2406633.73	E 2427857.56
15	TURF EDGE FACE	N 2406597.74	E 2427857.22
16	TURF EDGE FACE	N 2406597.70	E 2427861.22
17	BACKSTOP FACE	N 2406581.70	E 2427861.07
18	BACKSTOP FACE	N 2406533.71	E 2427860.62
19	BACKSTOP FACE	N 2406512.69	E 2427839.21
20	BACKSTOP FACE	N 2406513.15	E 2427791.21
21	TURF EDGE FACE	N 2406513.30	E 2427775.21
22	TURF EDGE FACE	N 2406517.30	E 2427775.25
23	TURF EDGE FACE	N 2406517.64	E 2427739.26
24	TURF EDGE FACE	N 2406513.64	E 2427739.22
25	TURF EDGE FACE	N 2406515.31	E 2427562.77
26	TURF EDGE FACE	N 2406515.99	E 2427490.39
27	TURF EDGE FACE	N 2406537.00	E 2427474.27
28	TURF EDGE FACE	N 2406600.73	E 2427474.87
29	GRANDSTAND FACE	N 2406608.74	E 2427474.95
30	GRANDSTAND FACE	N 2406676.49	E 2427475.58
31	GRANDSTAND FACE	N 2406740.98	E 2427476.18
32	FOOTBALL GOAL POST	N 2406895.08	E 2427587.66
33	FOOTBALL GOAL POST	N 2406519.10	E 2427584.11
34	FOOTBALL FIELD	N 2406887.65	E 2427527.58
35	FOOTBALL FIELD	N 2406886.33	E 2427667.58
36	FOOTBALL FIELD	N 2406527.85	E 2427504.19
37	FOOTBALL FIELD	N 2406526.35	E 2427664.18
38	SOCCER FIELD	N 2406853.93	E 2427497.26
39	SOCCER FIELD	N 2406851.86	E 2427717.25
40	SOCCER FIELD	N 2406527.95	E 2427494.19
41	SOCCER FIELD	N 2406525.87	E 2427714.18
42	LACROSSE FIELD	N 2406887.93	E 2427497.58
43	LACROSSE FIELD	N 2406886.23	E 2427677.58
44	LACROSSE FIELD	N 2406527.95	E 2427494.19
45	LACROSSE FIELD	N 2406526.25	E 2427674.18
46	BASEBALL HOME	N 2406542.77	E 2427830.70
47	BASEBALL FIRST	N 2406632.77	E 2427831.55
48	BASEBALL SECOND	N 2406633.62	E 2427741.56
49	BASEBALL THIRD	N 2406543.62	E 2427740.71
50	BASEBALL PITCHER	N 2406585.99	E 2427788.37
51	BASEBALL FOUL POLE	N 2406545.99	E 2427489.36
52	BASEBALL FOUL POLE	N 2406866.37	E 2427833.76
53	SOFTBALL HOME	N 2406834.79	E 2427833.46
54	SOFTBALL FIRST	N 2406835.36	E 2427773.49
55	SOFTBALL SECOND	N 2406775.38	E 2427772.92
56	SOFTBALL THIRD	N 2406774.82	E 2427832.89
57	SOFTBALL PITCHER	N 2406804.68	E 2427802.78
58	SOFTBALL FOUL POLE	N 2406624.80	E 2427831.48
59	SOFTBALL FOUL POLE	N 2406836.77	E 2427623.47
60	FOOTBALL/LACROSSE CENTER	N 2406707.09	E 2427585.88
61	SPORTS LIGHT	N 2406695.21	E 2427902.05
62	SPORTS LIGHT	N 2406585.66	E 2427865.44
63	SPORTS LIGHT	N 2406484.55	E 2427748.45
64	TENT ANCHOR	N 2406754.56	E 2427640.11
65	TENT ANCHOR	N 2406743.24	E 2427648.37
66	TENT ANCHOR	N 2406753.34	E 2427664.14
67	TENT ANCHOR	N 2406658.61	E 2427639.20
68	TENT ANCHOR	N 2406669.77	E 2427647.68
69	TENT ANCHOR	N 2406659.37	E 2427663.26
70	VICTORY BELL (BY OTHERS)	N 2406476.36	E 2427555.90

LAYOUT NOTES

1. CONTRACTOR TO VERIFY LOCATION OF ALL UTILITIES PRIOR TO INITIATION OF ANY DEMOLITION OR CONSTRUCTION OPERATIONS. ANY DAMAGE TO EXISTING UTILITIES ON SITE OR ADJACENT PROPERTY SHALL BE CONTRACTOR'S RESPONSIBILITY TO CORRECT.
2. CONSTRUCTION STAKING SHALL BE PERFORMED BY A STATE OF IDAHO REGISTERED LAND SURVEYOR.
3. ALL DIMENSIONS ARE TO FACE OF CURB, EDGE OF WALK, EDGE OF PAVEMENT, FACE OF BUILDING, OR FACE OF WALLS UNLESS OTHERWISE NOTED.
4. CONTRACTOR SHALL REFER TO SPECIFICATIONS FOR ADDITIONAL REQUIREMENTS.
5. LAYOUT PROJECT AS DESIGNED. CONTRACTOR SHALL REMOVE WORK THAT DOES NOT CONFORM TO DRAWINGS AND SPECIFICATIONS.
6. IN THE EVENT OF A DISCREPANCY, IMMEDIATELY NOTIFY LANDSCAPE ARCHITECT.
7. REFER CLOSELY TO LAYOUT DRAWINGS IN RELATION TO SITE LAYOUT ITEMS. CONTRACTOR TO VERIFY LISTED DIMENSIONS PRIOR TO CONSTRUCTION.
8. COORDINATE INSTALLATION OF ELECTRICAL AND IRRIGATION CONDUIT AND SLEEVES WITH RESPECTIVE CONTRACTORS.
9. REFER TO GRADING/MATERIALS/IRRIGATION PLAN TO AID IN PROJECT LAYOUT.
10. CONTRACTOR TO VERIFY LOCATIONS OF ALL FOOTING LOCATIONS FOR TENT ANCHORS, FENCE POST, BACKSTOP NETTING POSTS, FOOTBALL NETTING POST, AND FOUL POLES PRIOR TO CONSTRUCTION.

1 LAYOUT PLAN

SCALE: 1" = 30'-0" @ 22"x34" (FULL SIZE) | 1" = 60'-0" @ 11"x17" (HALF SIZE)

0 30 60 90

NORTH

STATE OF IDAHO
DOUGLAS R. HATCH
LA-150
02-18-20
LICENSED LANDSCAPE ARCHITECT

COPYRIGHT BERNARDO WILLS ARCHITECTS,PC 2013

153 SOUTH JEFFERSON SPOKANE WASHINGTON 99201 509.838.4511 FAX 509.838.4605 WWW.BERNARDOWILLS.COM

BID SET

LAYOUT PLAN

War Memorial Field Improvements - Phase I

801 Ontario Street
Sandpoint, Idaho 83864

B W A BERNARDO | WILLS ARCHITECTS PC

Project No: 19-10-207
Drawn by:
Date: 02-18-2020

L2.0

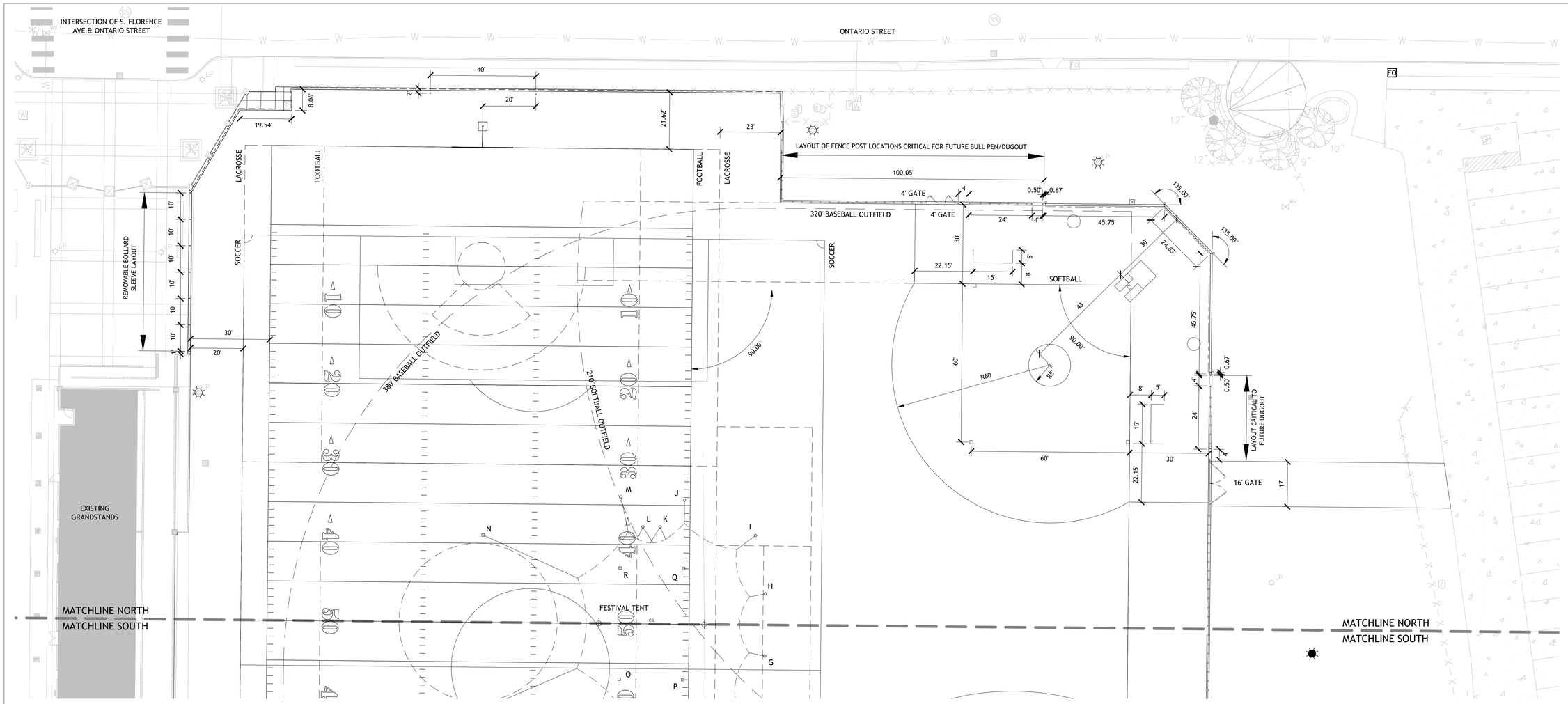

LAYOUT NOTES

1. CONTRACTOR TO VERIFY LOCATION OF ALL UTILITIES PRIOR TO INITIATION OF ANY DEMOLITION OR CONSTRUCTION OPERATIONS. ANY DAMAGE TO EXISTING UTILITIES ON SITE OR ADJACENT PROPERTY SHALL BE CONTRACTOR'S RESPONSIBILITY TO CORRECT.
2. CONSTRUCTION STAKING SHALL BE PERFORMED BY A STATE OF IDAHO REGISTERED LAND SURVEYOR.
3. ALL DIMENSIONS ARE TO FACE OF CURB, EDGE OF WALK, EDGE OF PAVEMENT, FACE OF BUILDING, OR FACE OF WALLS UNLESS OTHERWISE NOTED.
4. CONTRACTOR SHALL REFER TO SPECIFICATIONS FOR ADDITIONAL REQUIREMENTS.
5. LAYOUT PROJECT AS DESIGNED. CONTRACTOR SHALL REMOVE WORK THAT DOES NOT CONFORM TO DRAWINGS AND SPECIFICATIONS.
6. IN THE EVENT OF A DISCREPANCY, IMMEDIATELY NOTIFY LANDSCAPE ARCHITECT.
7. REFER CLOSELY TO LAYOUT DRAWINGS IN RELATION TO SITE LAYOUT ITEMS. CONTRACTOR TO VERIFY LISTED DIMENSIONS PRIOR TO CONSTRUCTION.
8. COORDINATE INSTALLATION OF ELECTRICAL AND IRRIGATION CONDUIT AND SLEEVES WITH RESPECTIVE CONTRACTORS.
9. REFER TO GRADING/MATERIALS/IRRIGATION PLAN TO AID IN PROJECT LAYOUT.
10. CONTRACTOR TO VERIFY LOCATIONS OF ALL FOOTING LOCATIONS FOR TENT ANCHORS, FENCE POST, BACKSTOP NETTING POSTS, FOOTBALL NETTING POST, AND FOUL POLES PRIOR TO CONSTRUCTION.

1 LAYOUT PLAN (NORTH)

SCALE: 1" = 20'-0" @ 22"x34" (FULL SIZE) | 1" = 40'-0" @ 11"x17" (HALF SIZE)

0 20 40 60

NORTH

COPYRIGHT BERNARDO WILLS ARCHITECTS.PC 2013

STATE OF IDAHO
DOUGLAS R. HATCH
LICENSED LANDSCAPE ARCHITECT
LA-150
02-18-20

153 SOUTH JEFFERSON SPOKANE WASHINGTON 99201 509.838.4511 FAX 509.838.4605 WWW.BERNARDOWILLS.COM

BID SET

LAYOUT PLAN NORTH

War Memorial Field Improvements - Phase I

801 Ontario Street
Sandpoint, Idaho 83864

B W A BERNARDO | WILLS ARCHITECTS PC

Project No: 19-10-207
Drawn by:
Date: 02-18-2020

L2.1

LAYOUT NOTES

1. CONTRACTOR TO VERIFY LOCATION OF ALL UTILITIES PRIOR TO INITIATION OF ANY DEMOLITION OR CONSTRUCTION OPERATIONS. ANY DAMAGE TO EXISTING UTILITIES ON SITE OR ADJACENT PROPERTY SHALL BE CONTRACTOR'S RESPONSIBILITY TO CORRECT.
2. CONSTRUCTION STAKING SHALL BE PERFORMED BY A STATE OF IDAHO REGISTERED LAND SURVEYOR.
3. ALL DIMENSIONS ARE TO FACE OF CURB, EDGE OF WALK, EDGE OF PAVEMENT, FACE OF BUILDING, OR FACE OF WALLS UNLESS OTHERWISE NOTED.
4. CONTRACTOR SHALL REFER TO SPECIFICATIONS FOR ADDITIONAL REQUIREMENTS.
5. LAYOUT PROJECT AS DESIGNED. CONTRACTOR SHALL REMOVE WORK THAT DOES NOT CONFORM TO DRAWINGS AND SPECIFICATIONS.
6. IN THE EVENT OF A DISCREPANCY, IMMEDIATELY NOTIFY LANDSCAPE ARCHITECT.
7. REFER CLOSELY TO LAYOUT DRAWINGS IN RELATION TO SITE LAYOUT ITEMS. CONTRACTOR TO VERIFY LISTED DIMENSIONS PRIOR TO CONSTRUCTION.
8. COORDINATE INSTALLATION OF ELECTRICAL AND IRRIGATION CONDUIT AND SLEEVES WITH RESPECTIVE CONTRACTORS.
9. REFER TO GRADING/MATERIALS/IRRIGATION PLAN TO AID IN PROJECT LAYOUT.
10. CONTRACTOR TO VERIFY LOCATIONS OF ALL FOOTING LOCATIONS FOR TENT ANCHORS, FENCE POST, BACKSTOP NETTING POSTS, FOOTBALL NETTING POST, AND FOUL POLES PRIOR TO CONSTRUCTION.

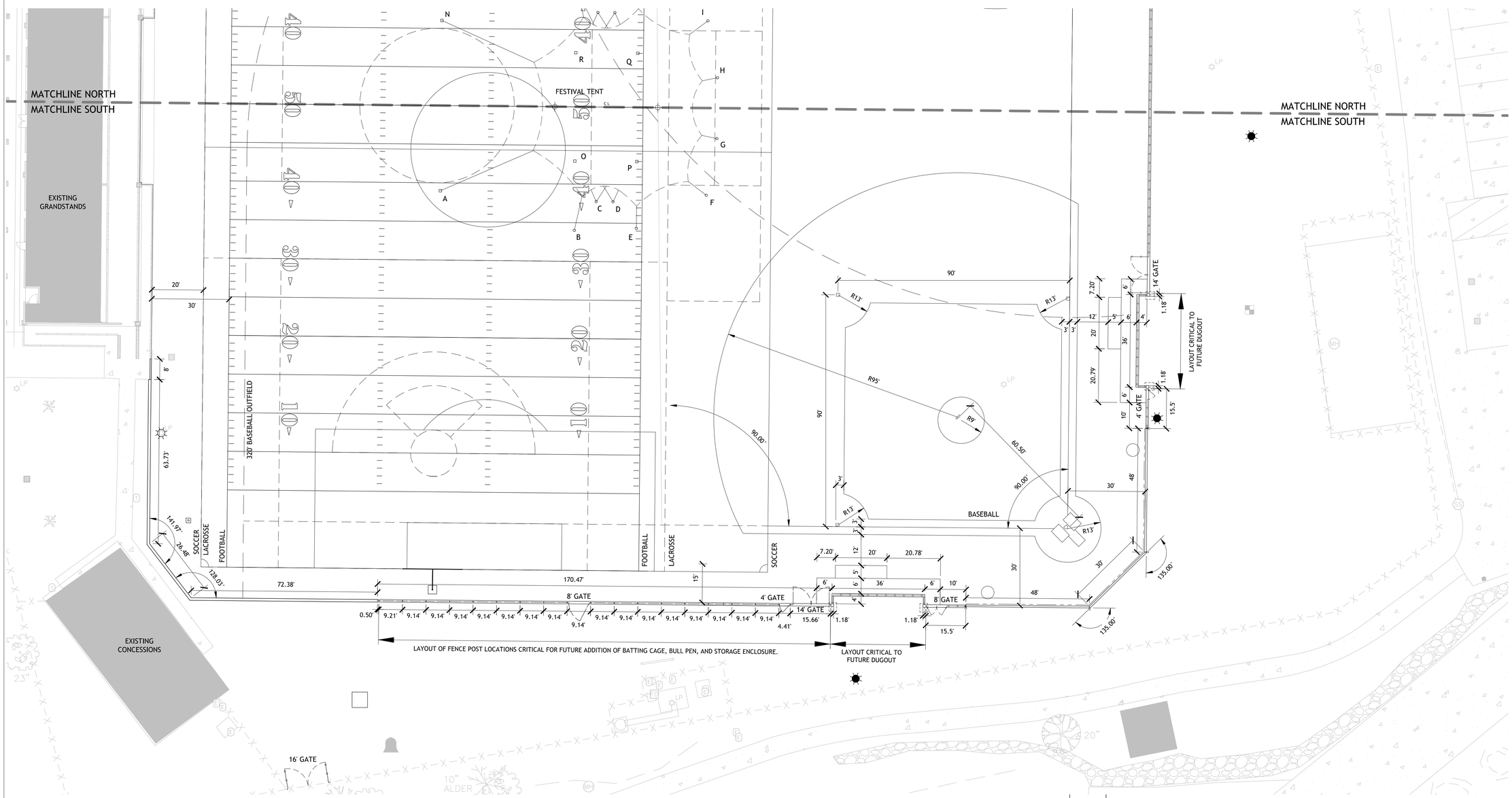

1 LAYOUT PLAN (SOUTH)

SCALE: 1" = 20'-0" @ 22"x34" (FULL SIZE) | 1" = 40'-0" @ 11"x17" (HALF SIZE)

COPYRIGHT BERNARDO WILLS ARCHITECTS,PC 2013

STATE OF IDAHO
CHRISTOPHER SCOTT HARTEN
LICENSED LANDSCAPE ARCHITECT
LA-150
02-18-20

153 SOUTH JEFFERSON SPOKANE WASHINGTON 99201 509.838.4511 FAX 509.838.4605 WWW.BERNARDOWILLS.COM

BID SET

LAYOUT PLAN SOUTH

War Memorial Field Improvements - Phase I

801 Ontario Street
Sandpoint, Idaho 83864

BERNARDO | WILLS ARCHITECTS PC

Project No: 19-10-207
Drawn by:
Date: 02-18-2020

L2.2

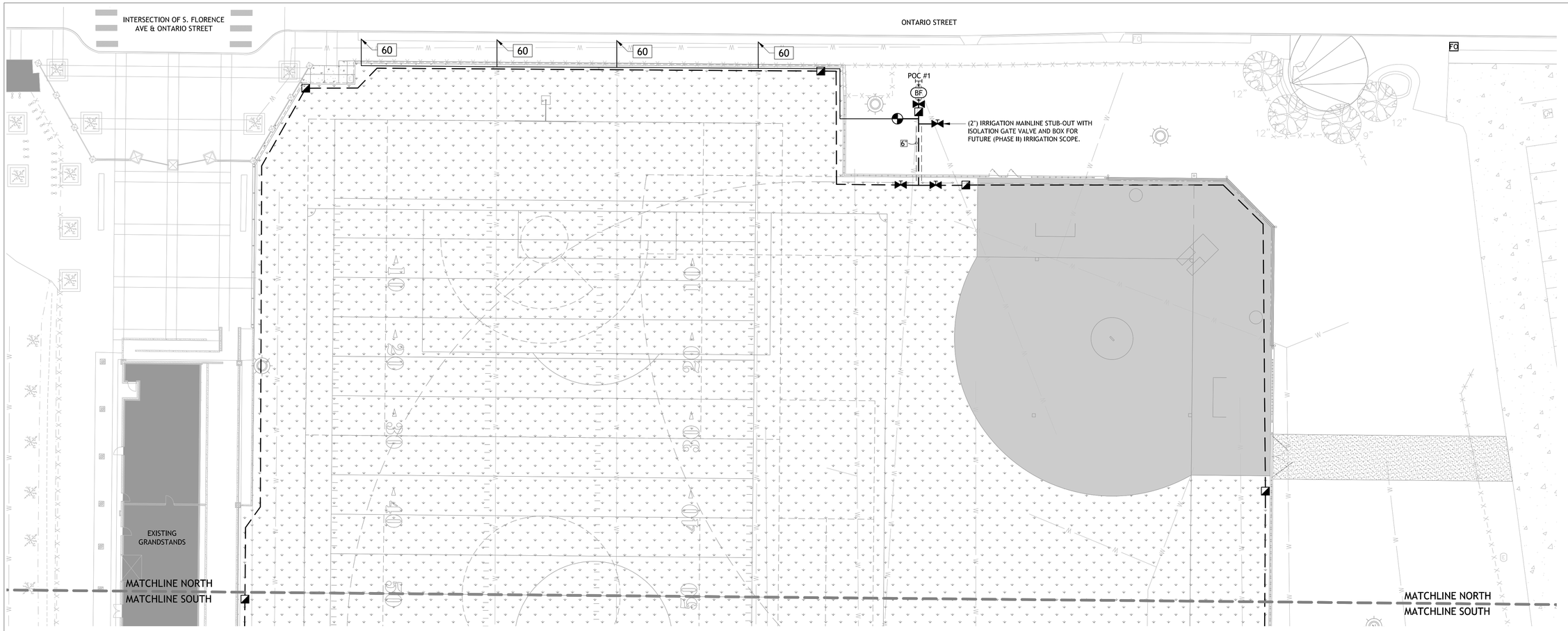

1 IRRIGATION PLAN (NORTH)

SCALE: 1" = 20'-0" @ 22"x34" (FULL SIZE) | 1" = 40'-0" @ 11"x17" (HALF SIZE)

IRRIGATION LEGEND

SYMBOL	MANUFACTURER/MODEL/DESCRIPTION	QTY
	RAIN BIRD PESB-PRS-D 1-1/2" 1", 1-1/2", 2" PLASTIC INDUSTRIAL VALVES. LOW FLOW OPERATING CAPABILITY, GLOBE CONFIGURATION. WITH PRESSURE REGULATING MODULE, AND SCRUBBER TECHNOLOGY FOR RELIABLE PERFORMANCE IN DIRTY WATER IRRIGATION APPLICATIONS. INCLUDE BATTERY OPERATED RAIN BIRD ESP-9V CONTROLLER TO OPERATE VALVE - SEE DETAIL #07/SHEET L6.0	1
	RAIN BIRD 44-NP 1" 1" BRASS QUICK-COUPLING VALVE, LOCKING NON-POTABLE PURPLE RUBBER COVER, AND 2-PIECE BODY. SEE DETAIL #08/SHEET L6.0 FOR QUICK COUPLER IN NATURAL TURF, DETAIL #08/SHEET L6.1 FOR QUICK COUPLERS IN SYNTHETIC TURF	10
	ISOLATION SHUT OFF VALVE NIBCO GATE VALVE - NON RISING STEM - SAME SIZE AS MAINLINE. SEE DETAIL #10 FOR ISOLATION VALVE IN NATURAL TURF, SEE DETAIL #12/SHEET L6.1 FOR ISOLATION VALVES IN SYNTHETIC TURF	5
BF	ZURN 975XL 2" REDUCED PRESSURE BACKFLOW DEVICE - SEE DETAIL #09/SHEET L6.0	1
POC #1	POINT OF CONNECTION 2" EXISTING (2") WATER METER	1
	IRRIGATION LATERAL LINE: PVC SCHEDULE 40	263.2 L.F.
	IRRIGATION MAINLINE: PVC SCHEDULE 40 2" UNLESS OTHERWISE NOTED ON PLAN	1,558 L.F.
	PIPE SLEEVE: PVC CLASS 200 SDR 21 6"	20.7 L.F.

Valve Callout

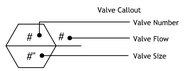

60 — CONNECT NEW SCHEDULE 40 LATERAL LINE TO EXISTING HDPE, SIDR 9, 200 PSI POLY CIRCUIT PIPING INCLUDING EXISTING TREE WELL BUBBLERS. EXTEND SLEEVES AS REQUIRED AND RUN NEW PVC THROUGH SLEEVES AND MAKE PVC TO POLY CONNECTIONS ON NORTH SIDE OF THE EXISTING SIDEWALK WITHIN THE NATURAL TURF AREA. SEE DETAIL #08/SHEET L6.1 AND (SP8) SPECIFICATIONS

**** ALL QUANTITIES PROVIDED SHALL BE CONFIRMED BY CONTRACTOR AND ARE SHOWN FOR REFERENCE ONLY. IN THE CASE OF A DISCREPANCY BETWEEN THE SCHEDULE AND PLAN, THE PLAN LOCATION(S) SHALL DICTATE QUANTITY.****

IRRIGATION NOTES

1. ALL WORK SHALL BE PERFORMED BY PERSONS FAMILIAR WITH THIS TYPE OF WORK AND UNDER THE SUPERVISION OF A QUALIFIED FOREMAN. THE FOREMAN SHALL REMAIN ON-SITE DURING ALL LANDSCAPE SOIL PREPARATION, IRRIGATION AND PLANTING INSTALLATIONS.
2. CONTRACTOR SHALL COMPLY WITH ALL LOCAL CODES AND ORDINANCES.
3. CONTRACTOR TO VERIFY LOCATION OF ALL UTILITIES PRIOR TO INITIATION OF ANY DEMOLITION OR CONSTRUCTION OPERATIONS. ANY DAMAGE TO EXISTING UTILITIES ON SITE OR ADJACENT PROPERTY SHALL BE CONTRACTOR'S RESPONSIBILITY TO REPAIR.
4. COORDINATE ALL IRRIGATION INSTALLATION OPERATIONS WITH CIVIL, AND ELECTRICAL ENGINEERING SHEETS.
5. IN THE EVENT OF A DISCREPANCY, IMMEDIATELY NOTIFY LANDSCAPE ARCHITECT.
6. CONTRACTOR SHALL REFER TO SPECIFICATIONS FOR ADDITIONAL REQUIREMENTS.
7. CONTRACTOR SHALL BE RESPONSIBLE FOR ANY DAMAGE TO NEW OR EXISTING CONCRETE FLATWORK, ASPHALT, OR LANDSCAPE AND TURF AREAS AS A RESULT OF CONSTRUCTION ACTIVITIES.
8. LOCATIONS OF EQUIPMENT SHALL BE APPROVED IN THE FIELD WITH OWNER AND LANDSCAPE ARCHITECT PRIOR TO INSTALLATION
9. CONTRACTOR SHALL FURNISH ALL LABOR, TOOLS, EQUIPMENT AND HARDWARE NECESSARY FOR PRODUCTION, EXECUTION AND COMPLETION OF ALL IRRIGATION WORK.
10. CONTRACTOR TO OBTAIN AND PAY FOR ALL PERMITS AND FEES REQUIRED FOR THIS WORK.
11. CONTRACTOR SHALL VERIFY WORKING PSI AT MAXIMUM OPERATING FLOW PRIOR TO CONSTRUCTION. COORDINATE WITH OWNER.
12. CONTRACTOR SHALL PATCH AND REPAIR EXISTING IRRIGATION SYSTEM AS REQUIRED FROM DAMAGE CAUSED BY CONSTRUCTION ACTIVITIES.
13. CONTRACTOR SHALL REMOVE AND DISPOSE OF ALL ROCK AND DEBRIS BROUGHT TO THE SURFACE AS A RESULT OF TRENCHING OPERATIONS.
14. ALL PIPE LINES SHALL BE PLACED SO THAT DESCRIPTIONS FACE UP.
15. CONTRACTOR SHALL LOCATE QUICK COUPLERS AND ISOLATION VALVES WITHIN 1' OF SIDEWALKS, FENCE, OR CURB EDGES IN A CLEAN ORDERLY MANNER WHENEVER POSSIBLE.
16. CONTRACTOR SHALL COORDINATE AND VERIFY THE INSTALLATION OF SLEEVES, WITH RESPECTIVE CONTRACTORS, IN ALL NECESSARY LOCATIONS FOR THE PROPOSED IRRIGATION DESIGN, PRIOR TO HARDSCAPE BEING INSTALLED THAT WOULD PREVENT IRRIGATION ACCESS TO ADJACENT LANDSCAPE AREAS. FAILURE TO VERIFY ALL NECESSARY IRRIGATION IS INSTALLED TO LANDSCAPE AREAS PRIOR TO HARDSCAPE BEING INSTALLED SHALL RESULT IN THE CONTRACTOR BEING RESPONSIBLE FOR ALL COSTS ASSOCIATED WITH EXTENDING THE IRRIGATION AND ANY HARDSCAPE/SOFTSCAPE REMOVAL AND REPAIR/REPLACEMENT.
17. CONTRACTOR SHALL COORDINATE WINTERIZATION OF THE SYSTEM WITH THE MAINTENANCE STAFF. THE CONTRACTOR SHALL INSPECT, ADJUST & MAKE ANY NECESSARY REPAIRS TO THE SYSTEM THE SPRING FOLLOWING INSTALLATION.

UNDERGROUND SERVICE ALERT
ONE-CALL NUMBER
811 OR
(800)342-1585
CALL TWO BUSINESS DAYS BEFORE YOU DIG

COPYRIGHT BERNARDO WILLS ARCHITECTS,PC 2013

STATE OF IDAHO
CHARLES R. HAGEN
LICENSED LANDSCAPE ARCHITECT
LA-150
02-18-20

153 SOUTH JEFFERSON SPOKANE WASHINGTON 99201 509.838.4511 FAX 509.838.4605 WWW.BERNARDOWILLS.COM
BERNARDO | WILLS ARCHITECTS PC

BID SET
IRRIGATION PLAN NORTH

War Memorial Field Improvements - Phase I

801 Ontario Street
Sandpoint, Idaho 83864

Project No: 19-10-207
Drawn by:
Date: 02-18-2020

L4.0

IRRIGATION LEGEND

SYMBOL	MANUFACTURER/MODEL/DESCRIPTION	QTY
	RAIN BIRD PESB-PRS-D 1-1/2" 1", 1-1/2", 2" PLASTIC INDUSTRIAL VALVES. LOW FLOW OPERATING CAPABILITY, GLOBE CONFIGURATION. WITH PRESSURE REGULATING MODULE, AND SCRUBBER TECHNOLOGY FOR RELIABLE PERFORMANCE IN DIRTY WATER IRRIGATION APPLICATIONS. INCLUDE BATTERY OPERATED RAIN BIRD ESP-9V CONTROLLER TO OPERATE VALVE - SEE DETAIL #07/SHEET L6.0	1
	RAIN BIRD 44-NP 1" 1" BRASS QUICK-COUPLING VALVE, LOCKING NON-POTABLE PURPLE RUBBER COVER, AND 2-PIECE BODY. SEE DETAIL #08/SHEET L6.0 FOR QUICK COUPLER IN NATURAL TURF, DETAIL #08/SHEET L6.1 FOR QUICK COUPLERS IN SYNTHETIC TURF	10
	ISOLATION SHUT OFF VALVE NIBCO GATE VALVE - NON RISING STEM - SAME SIZE AS MAINLINE. SEE DETAIL #10 FOR ISOLATION VALVE IN NATURAL TURF, SEE DETAIL #12/SHEET L6.1 FOR ISOLATION VALVES IN SYNTHETIC TURF	5
BF	ZURN 975XL 2" REDUCED PRESSURE BACKFLOW DEVICE - SEE DETAIL #09/SHEET L6.0	1
POC #1	POINT OF CONNECTION 2" EXISTING (2") WATER METER	1
	IRRIGATION LATERAL LINE: PVC SCHEDULE 40	263.2 L.F.
	IRRIGATION MAINLINE: PVC SCHEDULE 40 2" UNLESS OTHERWISE NOTED ON PLAN	1,558 L.F.
	PIPE SLEEVE: PVC CLASS 200 SDR 21 6"	20.7 L.F.

Valve Callout

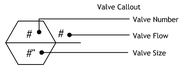

60 — CONNECT NEW SCHEDULE 40 LATERAL LINE TO EXISTING HDPE, SIDR 9, 200 PSI POLY CIRCUIT PIPING INCLUDING EXISTING TREE WELL BUBBLERS. EXTEND SLEEVES AS REQUIRED AND RUN NEW PVC THROUGH SLEEVES AND MAKE PVC TO POLY CONNECTIONS ON NORTH SIDE OF THE EXISTING SIDEWALK WITHIN THE NATURAL TURF AREA. SEE DETAIL #08/SHEET L6.1 AND (SP8) SPECIFICATIONS

**** ALL QUANTITIES PROVIDED SHALL BE CONFIRMED BY CONTRACTOR AND ARE SHOWN FOR REFERENCE ONLY. IN THE CASE OF A DISCREPANCY BETWEEN THE SCHEDULE AND PLAN, THE PLAN LOCATION(S) SHALL DICTATE QUANTITY.****

IRRIGATION NOTES

1. ALL WORK SHALL BE PERFORMED BY PERSONS FAMILIAR WITH THIS TYPE OF WORK AND UNDER THE SUPERVISION OF A QUALIFIED FOREMAN. THE FOREMAN SHALL REMAIN ON-SITE DURING ALL LANDSCAPE SOIL PREPARATION, IRRIGATION AND PLANTING INSTALLATIONS.
2. CONTRACTOR SHALL COMPLY WITH ALL LOCAL CODES AND ORDINANCES.
3. CONTRACTOR TO VERIFY LOCATION OF ALL UTILITIES PRIOR TO INITIATION OF ANY DEMOLITION OR CONSTRUCTION OPERATIONS. ANY DAMAGE TO EXISTING UTILITIES ON SITE OR ADJACENT PROPERTY SHALL BE CONTRACTOR'S RESPONSIBILITY TO REPAIR.
4. COORDINATE ALL IRRIGATION INSTALLATION OPERATIONS WITH CIVIL, AND ELECTRICAL ENGINEERING SHEETS.
5. IN THE EVENT OF A DISCREPANCY, IMMEDIATELY NOTIFY LANDSCAPE ARCHITECT.
6. CONTRACTOR SHALL REFER TO SPECIFICATIONS FOR ADDITIONAL REQUIREMENTS.
7. CONTRACTOR SHALL BE RESPONSIBLE FOR ANY DAMAGE TO NEW OR EXISTING CONCRETE FLATWORK, ASPHALT, OR LANDSCAPE AND TURF AREAS AS A RESULT OF CONSTRUCTION ACTIVITIES.
8. LOCATIONS OF EQUIPMENT SHALL BE APPROVED IN THE FIELD WITH OWNER AND LANDSCAPE ARCHITECT PRIOR TO INSTALLATION
9. CONTRACTOR SHALL FURNISH ALL LABOR, TOOLS, EQUIPMENT AND HARDWARE NECESSARY FOR PRODUCTION, EXECUTION AND COMPLETION OF ALL IRRIGATION WORK.
10. CONTRACTOR TO OBTAIN AND PAY FOR ALL PERMITS AND FEES REQUIRED FOR THIS WORK.
11. CONTRACTOR SHALL VERIFY WORKING PSI AT MAXIMUM OPERATING FLOW PRIOR TO CONSTRUCTION. COORDINATE WITH OWNER.
12. CONTRACTOR SHALL PATCH AND REPAIR EXISTING IRRIGATION SYSTEM AS REQUIRED FROM DAMAGE CAUSED BY CONSTRUCTION ACTIVITIES.
13. CONTRACTOR SHALL REMOVE AND DISPOSE OF ALL ROCK AND DEBRIS BROUGHT TO THE SURFACE AS A RESULT OF TRENCHING OPERATIONS.
14. ALL PIPE LINES SHALL BE PLACED SO THAT DESCRIPTIONS FACE UP.
15. CONTRACTOR SHALL LOCATE QUICK COUPLERS AND ISOLATION VALVES WITHIN 1' OF SIDEWALKS, FENCE, OR CURB EDGES IN A CLEAN ORDERLY MANNER WHENEVER POSSIBLE.
16. CONTRACTOR SHALL COORDINATE AND VERIFY THE INSTALLATION OF SLEEVES, WITH RESPECTIVE CONTRACTORS, IN ALL NECESSARY LOCATIONS FOR THE PROPOSED IRRIGATION DESIGN, PRIOR TO HARDSCAPE BEING INSTALLED THAT WOULD PREVENT IRRIGATION ACCESS TO ADJACENT LANDSCAPE AREAS. FAILURE TO VERIFY ALL NECESSARY IRRIGATION IS INSTALLED TO LANDSCAPE AREAS PRIOR TO HARDSCAPE BEING INSTALLED SHALL RESULT IN THE CONTRACTOR BEING RESPONSIBLE FOR ALL COSTS ASSOCIATED WITH EXTENDING THE IRRIGATION AND ANY HARDSCAPE/SOFTSCAPE REMOVAL AND REPAIR/REPLACEMENT.
17. CONTRACTOR SHALL COORDINATE WINTERIZATION OF THE SYSTEM WITH THE MAINTENANCE STAFF. THE CONTRACTOR SHALL INSPECT, ADJUST & MAKE ANY NECESSARY REPAIRS TO THE SYSTEM THE SPRING FOLLOWING INSTALLATION.

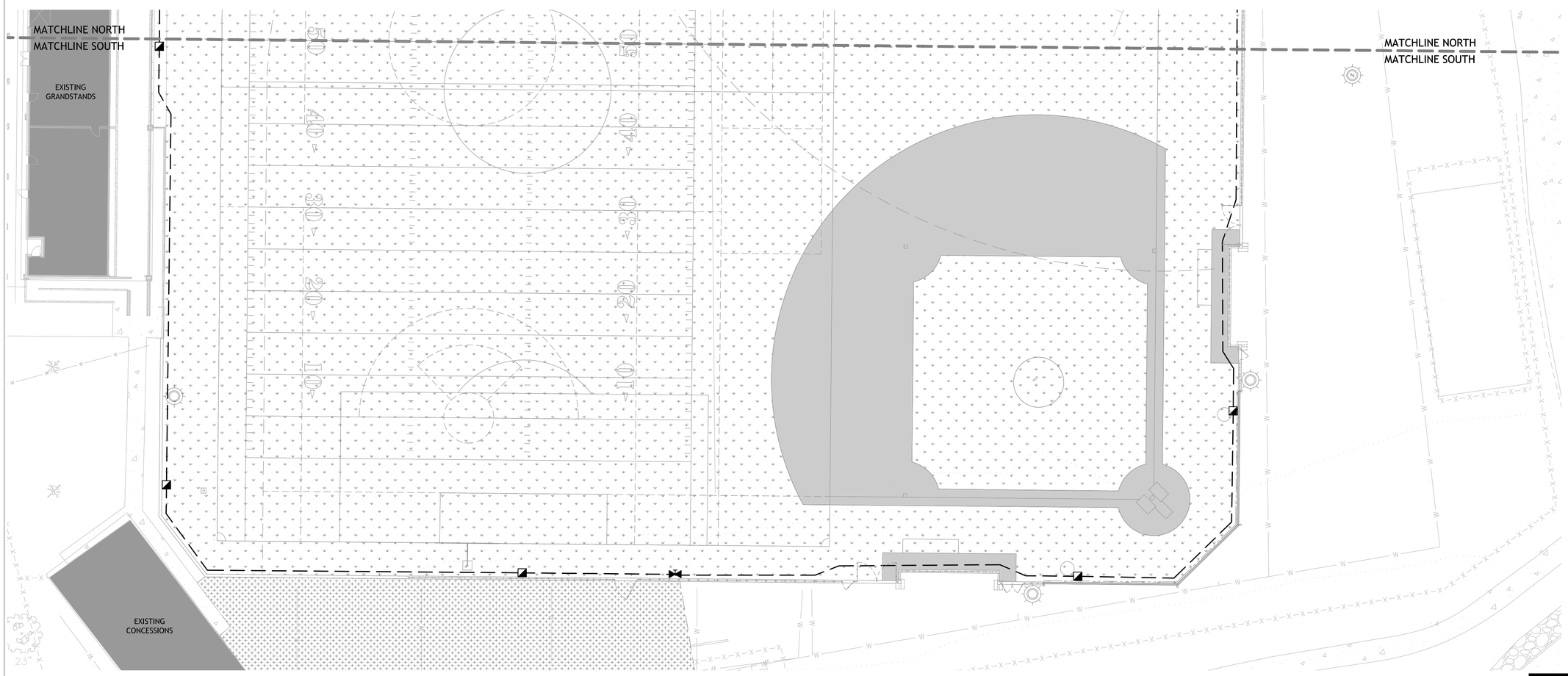

1 IRRIGATION PLAN (SOUTH)

SCALE: 1" = 20'-0" @ 22"x34" (FULL SIZE) | 1" = 40'-0" @ 11"x17" (HALF SIZE)

0 20 40 60

NORTH

UNDERGROUND SERVICE ALERT
ONE-CALL NUMBER
811 OR
(800)342-1585
CALL TWO BUSINESS DAYS BEFORE YOU DIG

COPYRIGHT BERNARDO WILLS ARCHITECTS,PC 2013

STATE OF IDAHO
DOUGLAS R. HARDEN
LA-150
02-18-20
LICENSED LANDSCAPE ARCHITECT

153 SOUTH JEFFERSON SPOKANE WASHINGTON 99201 509.838.4511 FAX 509.838.4605 WWW.BERNARDOWILLS.COM

BID SET
IRRIGATION PLAN
SOUTH

War Memorial Field
Improvements - Phase I

801 Ontario Street
Sandpoint, Idaho 83864

B W A BERNARDO | WILLS ARCHITECTS PC

Project No: 19-10-207
Drawn by:
Date: 02-18-2020

L4.1

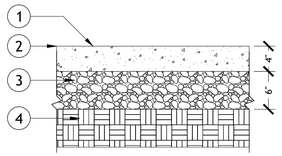

1. CONCRETE SURFACING AS SPECIFIED
2. FINISH GRADE
3. (6") MINIMUM COMPACTED 5/8" - MINUS CRUSHED AGGREGATE BASE COURSE
4. COMPACTED SUBGRADE

NOTES:
1. CONCRETE FINISH, COLOR, TEXTURE, AND MIX AS SPECIFIED.

01 (4") CONCRETE FLATWORK

1" = 1'-0"

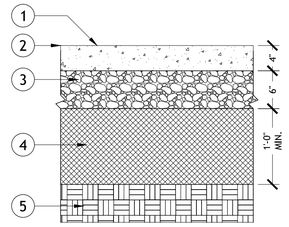

1. CONCRETE SURFACING AS SPECIFIED
2. FINISH GRADE
3. (6") MINIMUM COMPACTED 5/8" - MINUS CRUSHED AGGREGATE BASE COURSE
4. CEMENT TREATED SOIL BASE (CTB). SEE CIVIL SHEETS AND SPECIFICATIONS
5. COMPACTED SUBGRADE

NOTES:
1. CONCRETE FINISH, COLOR, TEXTURE, AND MIX AS SPECIFIED.

02 (4") CONCRETE FLATWORK OVER C.T.B.

1" = 1'-0"

1. TOOLED EDGE WITH GROOVER/JOINTER
2. 4" FLAT TOOLED AREA CENTERED ON CONTROL JOINT
3. COMPACTED 5/8" - MINUS AGGREGATE BASE
4. CONCRETE PER PLANS/SPECIFICATIONS

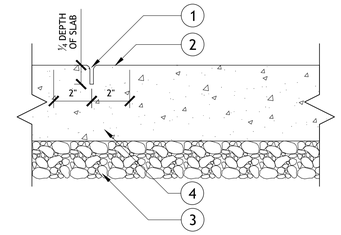

NOTES:
1. SPACE CONTROL JOINTS PER PLANS/SPECIFICATIONS.
2. CONCRETE FINISH, COLOR, TEXTURE, AND MIX AS SPECIFIED/PER PLAN.

03 CONCRETE CONTROL JOINT

3" = 1'-0"

1. EXPANSION JOINT FILLER MATERIAL AND SEALER
2. 4" FLAT TOOLED AREA CENTERED ON EXPANSION JOINT
3. COMPACTED 5/8" - MINUS AGGREGATE BASE
4. CONCRETE PER PLANS/SPECIFICATIONS

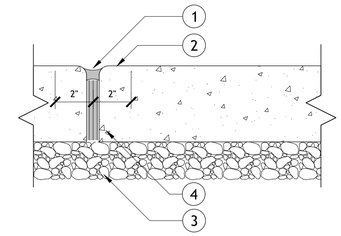

NOTES:
1. SPACE EXPANSION JOINTS PER PLANS/SPECIFICATIONS.
2. CONCRETE FINISH, COLOR, TEXTURE, AND MIX AS SPECIFIED.

04 CONCRETE EXPANSION JOINT

3" = 1'-0"

1. 6" DOWEL JOINT w/ GREASE SLEEVE, EXPANSION JOINT FILLER MATERIAL, & SEALER
2. 4" FLAT TOOLED AREA CENTERED ON EXPANSION JOINT
3. COMPACTED 5/8" - MINUS AGGREGATE BASE
4. CONCRETE PER PLANS/SPECIFICATIONS

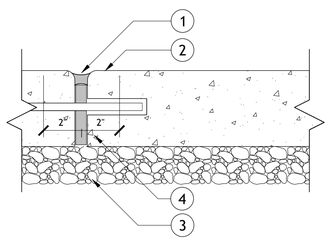

NOTES:
1. SPACE EXPANSION JOINTS PER PLANS/SPECIFICATIONS.
2. CONCRETE FINISH, COLOR, TEXTURE, AND MIX AS SPECIFIED/PER PLAN.

05 CONCRETE DOWEL JOINT W/ GREASE SLEEVE

3" = 1'-0"

1. SYNTHETIC TURF CARPET AS SPECIFIED
2. (12") DEPTH SYNTHETIC TURF PROFILE - SEE DETAIL #01/SHEET L6.1
3. (12") DEPTH CEMENT TREATED SOIL BASE (CTB). SEE CIVIL SHEETS AND SPECIFICATIONS
4. SYNTHETIC TURF EDGE TYPE II. THICKEN TO REST ON CONCRETE FOOTING
5. FUTURE CMU WALL FOR DUGOUT - NOT IN PHASE I CONTRACT
6. CONCRETE FOOTING FOR FUTURE PHASE II DUGOUT CONSTRUCTION. SEE MATERIALS PLAN SHEET L1.1 FOR LOCATIONS

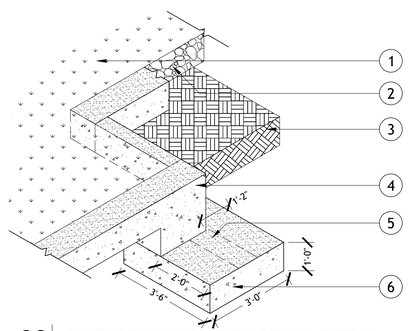

06 FUTURE DUGOUT FOOTING DETAIL

3/8" = 1'-0"

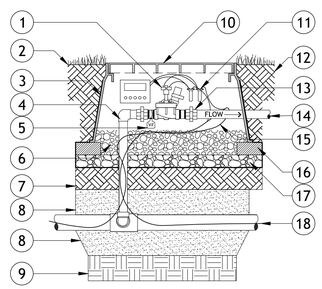

NOTES:
1. ONE REMOTE CONTROL VALVE PER VALVE BOX. NO MANIFOLD SYSTEMS.
2. ALL PIPE, UNIONS, NIPPLES, AND FITTINGS SHALL BE SCHEDULE 80 PVC INSIDE VALVE BOX UNLESS OTHERWISE NOTED.
3. ALL FITTINGS AND NIPPLES SHALL BE THE SAME DIAMETER OF REMOTE CONTROL VALVE.
4. BEDDING MATERIAL SHALL BE CLEAN BEDDING SAND OR NATIVE SOIL CLEAR OF ROCKS AND DEBRIS GREATER THAN (1").
5. NO ROCKS SHALL BE PLACED AGAINST PIPE.

1. REMOTE CONTROL VALVE (RCV) PER SPECS
2. FINISH GRADE
3. GEOTEXTILE FILTER FABRIC. WRAP AROUND VALVE BOX AND DUCT TAPE TOP EDGES TO BOX.
4. SCHEDULE 80 90° DEGREE ELBOW
5. VALVE NUMBER IDENTIFICATION TAG (1) PER VALVE
6. PEA GRAVEL DRAINAGE (3-4") DEPTH
7. COMPACTED NATIVE SOIL SUBGRADE (DEPTH VARIES)
8. BEDDING MATERIAL (PER NOTE #4)
9. UNDISTURBED EARTH
10. VALVE BOX. LID SHALL BE INSTALLED FLUSH w/ FINISH GRADE IN TURF AREAS & FLUSH w/ MULCH TOPDRESSING IN SHRUB AREAS
11. WATERPROOF GREASE CAP AND WIRE CONNECTORS
12. NATIVE SOIL BACKFILL
13. (2) SCHEDULE 80 UNIONS PER VALVE
14. LATERAL PIPE
15. (36") MIN. EXCESS CONTROL WIRE LOOP IN VALVE BOX
16. STABILIZING BRICK (4) PER BOX
17. (2") DEPTH MIN. COMPACTED 5/8" - MINUS CRUSHED BASALT
18. IRRIGATION CONTROL WIRE

07 IRRIGATION REMOTE CONTROL VALVE (RCV)

1" = 1'-0"

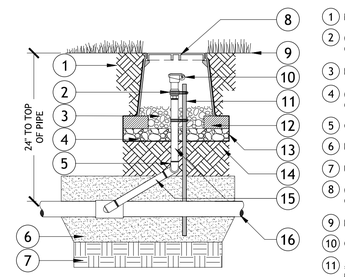

NOTES:
1. CONTRACTOR TO PROVIDE (2) QUICK COUPLER KEYS TO OWNER DURING FINAL PROJECT WALK-THROUGH.
2. ONE QUICK COUPLER PER (10") ROUND VALVE BOX.
3. ALL PIPE, NIPPLES, AND FITTINGS BETWEEN MAINLINE AND QUICK COUPLER SHALL BE SIZED TO MATCH QUICK COUPLER SIZE.
4. BEDDING MATERIAL SHALL BE CLEAN BEDDING SAND OR NATIVE SOIL CLEAR OF ROCKS AND DEBRIS GREATER THAN (1").
5. NO ROCKS SHALL BE PLACED AGAINST PIPE.
6. TOP OF QUICK COUPLER ASSEMBLY SHALL BE SET (3") BELOW LID OF VALVE BOX.

1. NATIVE SOIL BACKFILL
2. (2) STAINLESS STEEL HOSE CLAMPS PER QUICK COUPLER (SIZED TO FIT)
3. PEA GRAVEL DRAINAGE (3-4") DEPTH
4. (2") DEPTH MIN. COMPACTED 5/8" - MINUS CRUSHED BASALT
5. GALVANIZED TRIPLE SWING JOINT
6. BEDDING MATERIAL (PER NOTE #4)
7. UNDISTURBED EARTH
8. (10") ROUND VALVE BOX. SET PLUMB w/ FINISH GRADE, PROVIDE EXTENSIONS AS NEEDED
9. FINISH GRADE
10. QUICK COUPLER PER SPECS
11. #5 REBAR, (24") MIN. LENGTH. (CAUTION: DO NOT ANCHOR THROUGH MAINLINE BELOW)
12. STABILIZING BRICK (4) PER BOX
13. GEOTEXTILE FILTER FABRIC. WRAP AROUND VALVE BOX AND DUCT TAPE TOP EDGES TO BOX.
14. COMPACTED NATIVE SOIL SUBGRADE (DEPTH VARIES)
15. GALVANIZED NIPPLES
16. PVC MAINLINE PER PLANS

08 IRRIGATION QUICK COUPLER IN NATURAL TURF

1" = 1'-0"

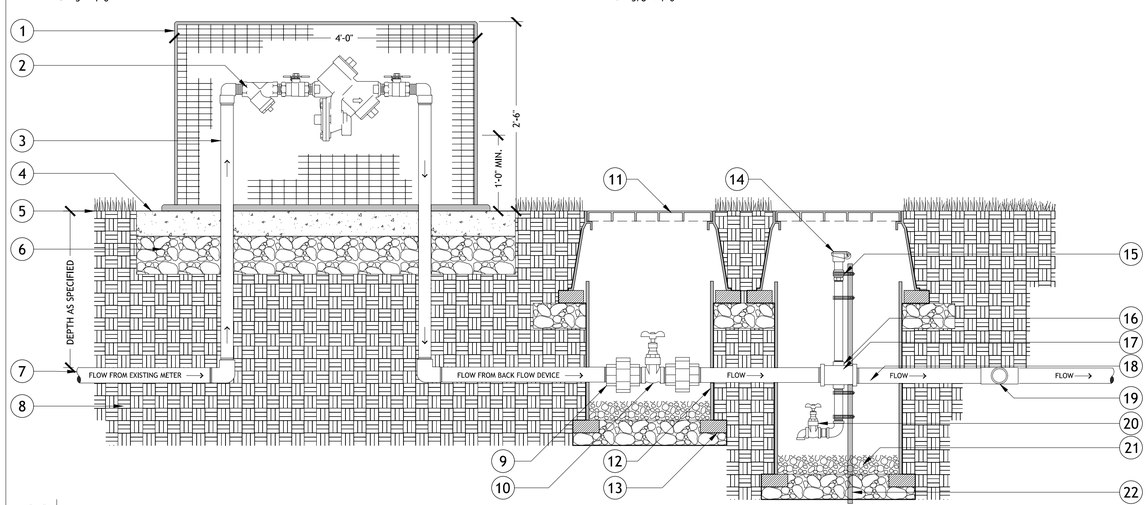

1. BACKFLOW CAGE w/ CONCRETE FORM & PRE-INSTALLED ATTACHING HARDWARE
2. REDUCED PRESSURE VALVE BACKFLOW ASSEMBLY PER PLANS & AS SPECIFIED
3. LINE SIZE GALVANIZED PIPE & FITTINGS, TYP. UNTIL QUICK COUPLER
4. (4") CONCRETE PAD FOR BACK FLOW SECURITY CAGE
5. FINISH GRADE
6. (6") DEPTH COMPACTED 5/8" - MINUS CRUSHED AGGREGATE BASE
7. WATER SOURCE FROM EXISTING METER AND SHUT-OFF VALVE
8. NATIVE SOIL BACKFILL
9. LINE SIZE GALVANIZED UNIONS, TYP.
10. ISOLATION SHUT-OFF BRASS GATE VALVE, LINE SIZE
11. THERMOPLASTIC VALVE BOX w/ LOCKING LID AS SPECIFIED, (USE VALVE BOX EXTENSIONS AS NECESSARY). LID SHALL BE INSTALLED FLUSH w/ FINISH GRADE IN TURF AREAS & FLUSH w/ MULCH TOPDRESSING IN SHRUB AREAS, TYP. WRAP GEOTEXTILE FILTER FABRIC AROUND VALVE BOX AND DUCT TAPE TOP EDGES TO BOX.
12. VALVE BOX EXTENSION(S) AS REQUIRED
13. STABILIZING BRICK (4) PER BOX, TYP.
14. (1") QUICK COUPLER, SEE IRRIGATION SCHEDULE FOR MANUFACTURER'S INFORMATION
15. STAINLESS STEEL HOSE CLAMPS (SIZED TO FIT)
16. (1") GALVANIZED THREADED TEE INSTALLED VERTICALLY
17. LINE SIZE GALVANIZED TEE w/ REDUCER DOWN TO (1")
18. MAINLINE AS SPECIFIED
19. PVC TEE TO SUPPLY EXISTING IRRIGATION CIRCUIT PIPING
20. MANUAL DRAIN VALVE, (1") MIN. BRASS GATE VALVE w/ 90° DEGREE STREET ELBOW POINTING DOWN
21. PEA GRAVEL DRAINAGE (3-4") DEPTH
22. #5 REBAR, (60") MIN. LENGTH, ANCHOR INTO UNDISTURBED EARTH BELOW

09 IRRIGATION POINT OF CONNECTION (P.O.C.) w/ REDUCED PRESSURE VALVE ASSEMBLY - [2"-INCH AND SMALLER]

1" = 1'-0"

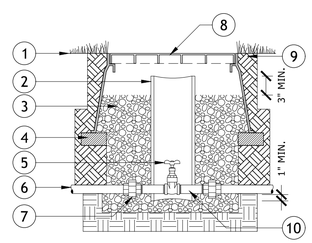

NOTES:
1. ALL UNIONS, NIPPLES, AND FITTINGS SHALL BE SCHEDULE 80 PVC INSIDE VALVE BOX UNLESS OTHERWISE NOTED.
2. ALL FITTINGS AND NIPPLES SHALL BE THE SAME DIAMETER OF ISOLATION VALVE.

1. FINISH GRADE
2. PIPE SLEEVE EXTENSION WHEN VALVE IS DEEPER THAN VALVE BOX. SCHEDULE 40 PVC, SIZED TO FIT
3. PEA GRAVEL DRAINAGE. INSTALL (3") BELOW TOP OF PIPE SLEEVE EXTENSION
4. STABILIZING BRICK (4) PER BOX
5. BRASS GATE VALVE, SIZED TO MATCH MAINLINE
6. PVC MAINLINE AS SPECIFIED
7. SCHEDULE 80 PVC UNIONS (TYP.)
8. CARSON (OR APPROVED EQUAL) THERMOPLASTIC VALVE BOX w/ LOCKING LID (USE VALVE BOX EXTENSIONS AS NECESSARY). LID SHALL BE INSTALLED FLUSH w/ FINISH GRADE IN TURF AREAS & FLUSH w/ MULCH TOPDRESSING IN SHRUB AREAS
9. NATIVE SOIL BACKFILL
10. SCHEDULE 80 THREADED NIPPLE TO EXTEND BEYOND PIPE SLEEVE EXTENSION AND REMAIN WITHIN VALVE BOX CONSTRAINTS

10 ISOLATION VALVE IN NATURAL TURF

1" = 1'-0"

STATE OF IDAHO
JERALL R. HARDEN
LICENSED LANDSCAPE ARCHITECT
LA-150
02-18-20

COPYRIGHT BERNARDO WILLS ARCHITECTS,PC 2013

153 SOUTH JEFFERSON SPOKANE WASHINGTON 99201 509.838.4511 FAX 509.838.4605 WWW.BERNARDOWILLS.COM

BID SET

SITE DETAILS

War Memorial Field Improvements - Phase I

801 Ontario Street
Sandpoint, Idaho 83864

B W A BERNARDO | WILLS ARCHITECTS PC

Project No: 19-10-207
Drawn by:
Date: 02-18-2020

L6.0

1. CEMENT TREATED SOIL BASE (CTB). SEE CIVIL SHEETS AND SPECIFICATIONS
2. UNDISTURBED EARTH OR COMPACTED SUBGRADE
3. SYNTHETIC TURF PAD SURFACING AS SPECIFIED
4. SYNTHETIC TURF CARPET w/ INFILL AS SPECIFIED
5. COMPACTED TOP COURSE AGGREGATE BASE - SEE SPECIFICATIONS
6. COMPACTED BASE COURSE AGGREGATE BASE - SEE SPECIFICATIONS
7. ADS ADVANEDGE FLAT PANEL DRAIN, SLOPE TO DRAINAGE STRUCTURES PER GRADING PLAN(S) - SEE SPECIFICATIONS

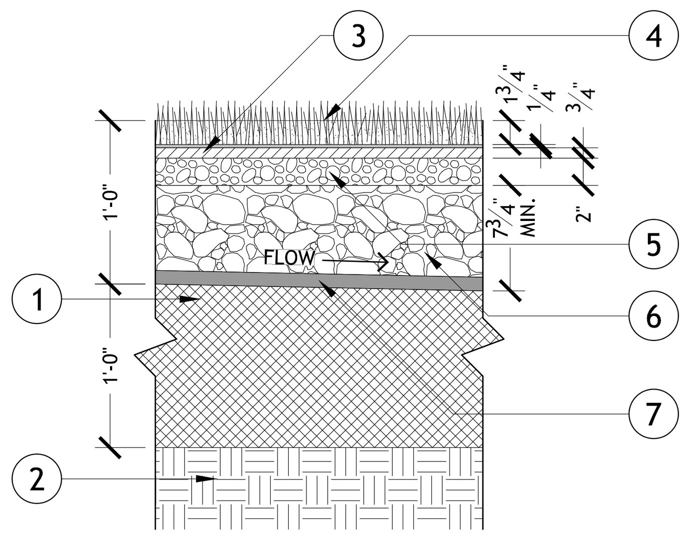

01 STANDARD SYNTHETIC TURF PROFILE

1" = 1'-0"

1. 2" x 6" COMPOSITE LUMBER NAILER BOARD FASTENED TO CONCRETE w/ 1/4"D x 3"L CONCRETE ANCHOR
2. 4" STANDARD CONCRETE FLATWORK - NOT IN PHASE I CONTRACT
3. 6" x 12" CONCRETE CURB w/ (2) #3 REBAR EDGE REINFORCEMENT CONTINUOUS
4. COMPACTED 5/8" MINUS CRUSHED AGGREGATE BASE
5. CEMENT TREATED SOIL BASE (CTB). SEE CIVIL SHEETS AND SPECIFICATIONS
6. UNDISTURBED EARTH OR COMPACTED SUBGRADE
7. SYNTHETIC TURF PAD SURFACING AS SPECIFIED
8. SYNTHETIC TURF CARPET w/ INFILL AS SPECIFIED
9. COMPACTED TOP COURSE AGGREGATE BASE - SEE SPECIFICATIONS
10. COMPACTED BASE COURSE AGGREGATE BASE - SEE SPECIFICATIONS
11. ADS ADVANEDGE FLAT PANEL DRAIN, SLOPE TO DRAINAGE STRUCTURES PER GRADING PLAN(S) - SEE SPECIFICATIONS

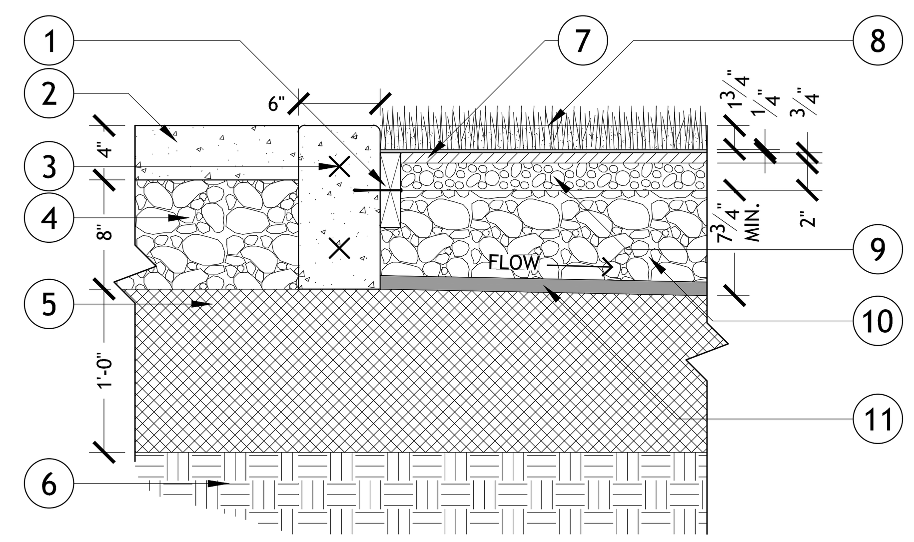

02 SYNTHETIC TURF EDGE - TYPE I

1" = 1'-0"

1. NEW FENCE POST
2. 2" x 6" COMPOSITE LUMBER NAILER BOARD FASTENED TO CONCRETE w/ 1/4"D x 3"L CONCRETE ANCHOR
3. 4" STANDARD CONCRETE FLATWORK - NOT INCLUDED IN PHASE I CONTRACT
4. 12" x 12" CONCRETE CURB w/ (2) #3 REBAR EDGE REINFORCEMENT CONTINUOUS. CURB HEIGHT VARIES WITH SUBGRADE - SEE CIVIL SHEETS
5. COMPACTED 5/8" MINUS CRUSHED AGGREGATE BASE
6. NEW FENCE POST FOOTING
7. UNDISTURBED EARTH OR COMPACTED SUBGRADE
8. SYNTHETIC TURF PAD SURFACING AS SPECIFIED
9. SYNTHETICTURF CARPET w/ INFILL AS SPECIFIED
10. COMPACTED TOP COURSE AGGREGATE BASE - SEE SPECIFICATIONS
11. COMPACTED BASE COURSE AGGREGATE BASE - SEE SPECIFICATIONS
12. CEMENT TREATED SOIL BASE (CTB). SEE CIVIL SHEETS AND SPECIFICATIONS
13. ADS ADVANEDGE FLAT PANEL DRAIN, SLOPE TO DRAINAGE STRUCTURES PER GRADING PLAN(S) - SEE SPECIFICATIONS

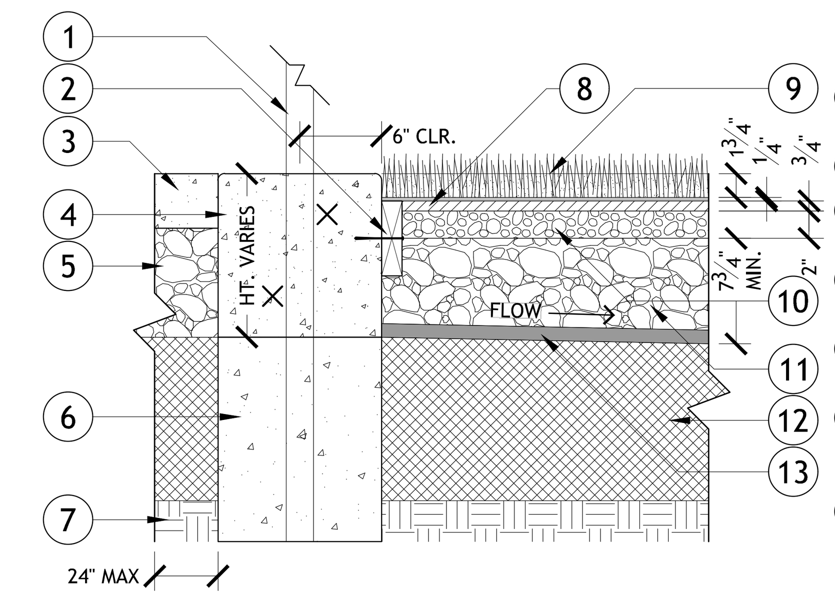

03 SYNTHETIC TURF EDGE - TYPE II

1" = 1'-0"

1. EXISTING FENCE POST
2. 2" x 6" COMPOSITE LUMBER NAILER BOARD FASTENED TO CONCRETE w/ 1/4"D x 3"L CONCRETE ANCHOR
3. 4" STANDARD CONCRETE FLATWORK
4. 6" x 12" CONCRETE CURB w/ (2) #3 REBAR EDGE REINFORCEMENT CONTINUOUS
5. COMPACTED 5/8" MINUS CRUSHED AGGREGATE BASE
6. UNDISTURBED EARTH OR COMPACTED SUBGRADE
7. EXISTING FENCE POST FOOTING
8. SYNTHETIC TURF PAD SURFACING (TBD)
9. SYNTHETIC TURF CARPET w/ INFILL AS SPECIFIED
10. COMPACTED TOP COURSE AGGREGATE BASE - SEE SPECIFICATIONS
11. COMPACTED BASE COURSE AGGREGATE BASE - SEE SPECIFICATIONS
12. CEMENT TREATED SOIL BASE (CTB). SEE CIVIL SHEETS AND SPECIFICATIONS
13. ADS ADVANEDGE FLAT PANEL DRAIN, SLOPE TO DRAINAGE STRUCTURES PER GRADING PLAN(S) - SEE SPECIFICATIONS

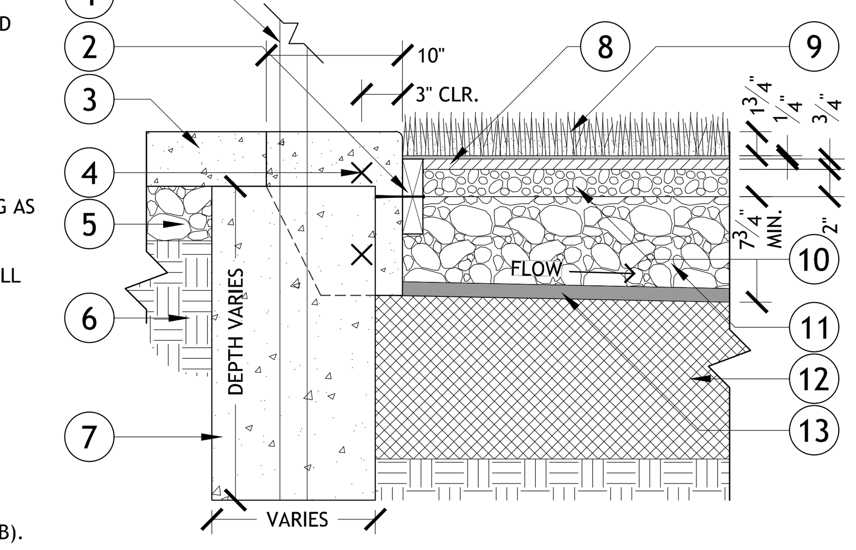

04 SYNTHETIC TURF EDGE - TYPE III

1" = 1'-0"

1. EXISTING WALL OF STADIUM OR NEW BACKSTOP STEM WALL
2. 2" x 6" COMPOSITE LUMBER NAILER BOARD FASTENED TO CONCRETE w/ 1/4"D x 3"L CONCRETE ANCHOR
3. CONCRETE STEM WALL
4. UNDISTURBED EARTH OR COMPACTED SUBGRADE
5. SYNTHETIC TURF PAD SURFACING (TBD)
6. SYNTHETIC TURF CARPET w/ INFILL AS SPECIFIED
7. COMPACTED TOP COURSE AGGREGATE BASE - SEE SPECIFICATIONS
8. COMPACTED BASE COURSE AGGREGATE BASE - SEE SPECIFICATIONS
9. CEMENT TREATED SOIL BASE (CTB). SEE CIVIL SHEETS AND SPECIFICATIONS
10. ADS ADVANEDGE FLAT PANEL DRAIN, SLOPE TO DRAINAGE STRUCTURES PER GRADING PLAN(S) - SEE SPECIFICATIONS

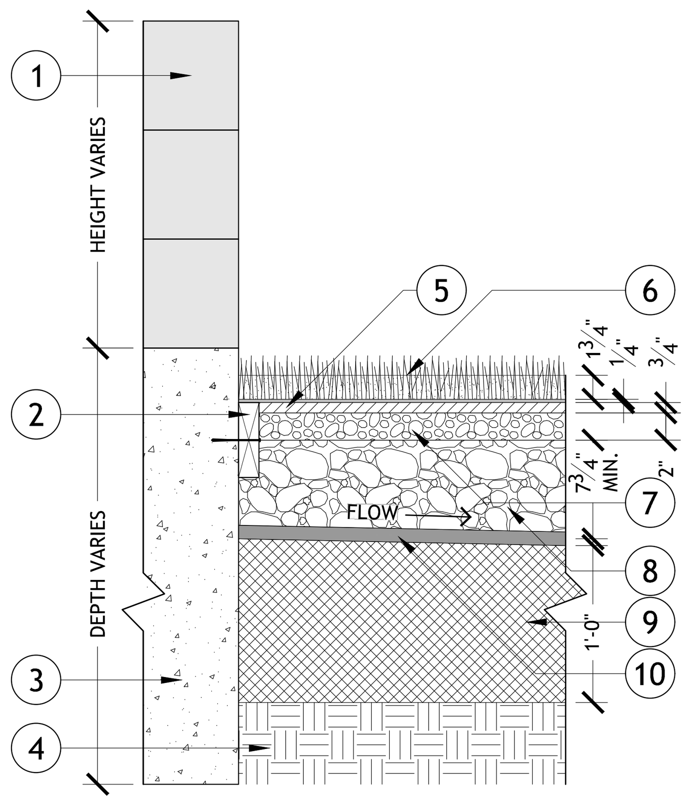

05 SYNTHETIC TURF EDGE - TYPE IV

1" = 1'-0"

1. 2" x 6" COMPOSITE LUMBER NAILER BOARD FASTENED TO CONCRETE w/ 1/4"D x 3"L CONCRETE ANCHOR
2. (2) #3 REBAR EDGE REINFORCEMENT CONTINUOUS
3. THICKENED EDGE CONCRETE FLATWORK w/ (2) #3 REBAR CONTINUOUS
4. 4" COMPACTED 5/8" MINUS CRUSHED AGGREGATE BASE
5. CEMENT TREATED SOIL BASE (CTB). SEE CIVIL SHEETS AND SPECIFICATIONS
6. UNDISTURBED EARTH OR COMPACTED SUBGRADE
7. SYNTHETIC TURF PAD SURFACING (TBD)
8. SYNTHETIC TURF CARPET w/ INFILL AS SPECIFIED
9. COMPACTED TOP COURSE AGGREGATE BASE - SEE SPECIFICATIONS
10. COMPACTED BASE COURSE AGGREGATE BASE - SEE SPECIFICATIONS
11. ADS ADVANEDGE FLAT PANEL DRAIN, SLOPE TO DRAINAGE STRUCTURES PER GRADING PLAN(S) - SEE SPECIFICATIONS

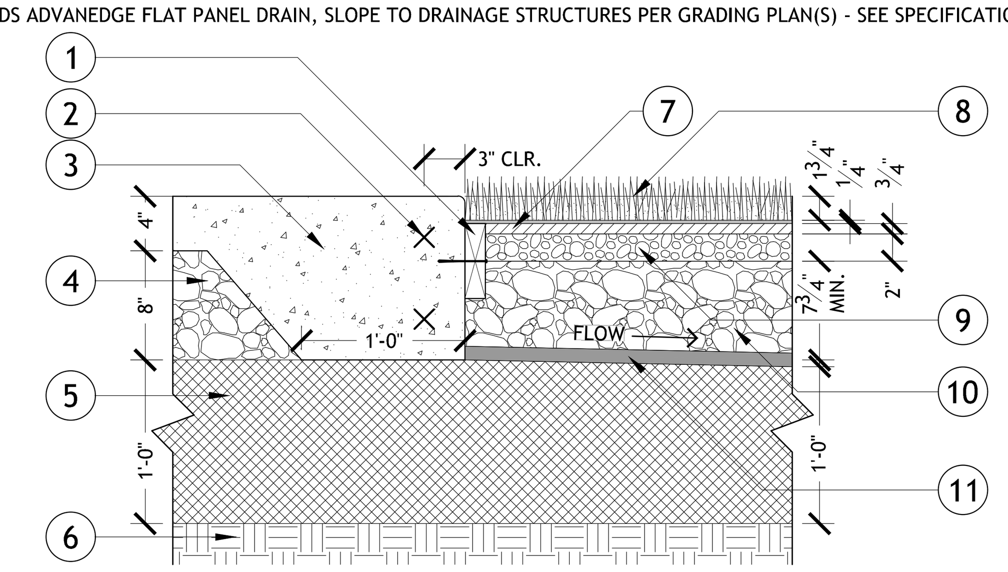

06 SYNTHETIC TURF EDGE - TYPE V

1" = 1'-0"

1. 2" x 6" COMPOSITE LUMBER NAILER BOARD FASTENED TO CONCRETE w/ 1/4"D x 3"L CONCRETE ANCHOR
2. 4" STANDARD CONCRETE FLATWORK
3. 12" x 12" CONCRETE CURB w/ (2) #3 REBAR EDGE REINFORCEMENT CONTINUOUS
4. COMPACTED 5/8" MINUS CRUSHED AGGREGATE BASE
5. CEMENT TREATED SOIL BASE (CTB). SEE CIVIL SHEETS AND SPECIFICATIONS
6. #4 x 18" REBAR VERTICAL PIN TO SECURE CONCRETE EDGING TO CEMENT TREATED BASE, 24" O.C.
7. UNDISTURBED EARTH OR COMPACTED SUBGRADE
8. SYNTHETIC TURF PAD SURFACING (TBD)
9. SYNTHETIC TURF CARPET w/ INFILL AS SPECIFIED
10. COMPACTED TOP COURSE AGGREGATE BASE - SEE SPECIFICATIONS
11. COMPACTED BASE COURSE AGGREGATE BASE - SEE SPECIFICATIONS
12. ADS ADVANEDGE FLAT PANEL DRAIN, SLOPE TO DRAINAGE STRUCTURES PER GRADING PLAN(S) - SEE SPECIFICATIONS

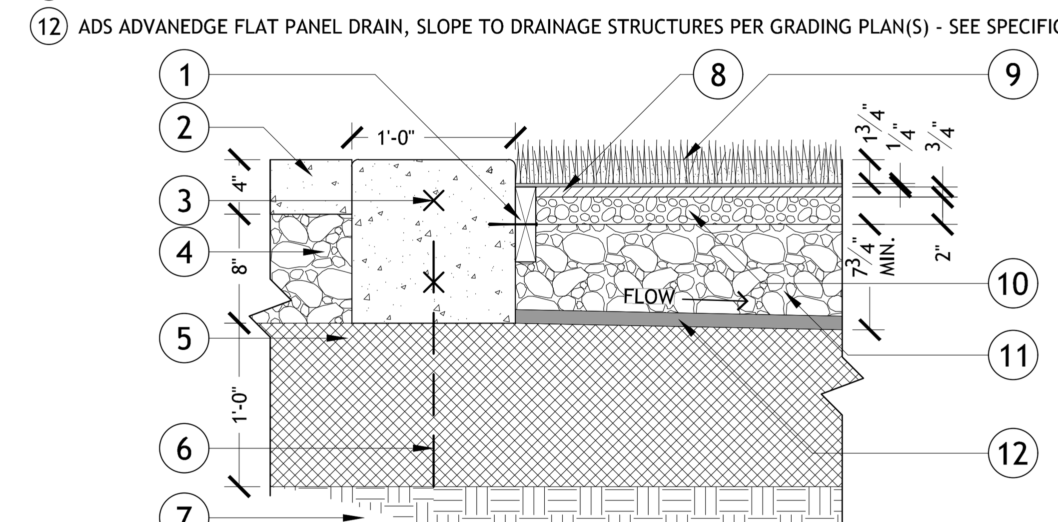

07 SYNTHETIC TURF EDGE - TYPE VI

1" = 1'-0"

1. EDGING RESTRAINT PER PLAN
2. SLEEVE AS SPECIFIED
3. CEMENT TREATED BASE (CTB)
4. IRRIGATION MAINLINE AS SPECIFIED
5. NEW SCH. 40 PVC LATERAL LINES TO RE-CONNECT EXISTING IRRIGATION CIRCUIT PIPING.
6. 1-1/2" VERTICAL RUBBER GASKET & BOX LID w/ SYNTHETIC TURF CARPET
7. QUICK COUPLER AS SPECIFIED ATTACHED TO BOX w/ PROVIDED PIPE CLAMPS. GALVANIZED PIPE BETWEEN QUICK COUPLER & MAINLINE, TYP.
8. CUSTOM "SPORTSFIELD SPECIALTIES" TCITQCV VALVE BOX, MODIFIED SIZE w/ LEVELING BOLTS SET ON LEVELING BRICKS (4) PER BOX
9. SYNTHETIC TURF CARPET & TYPICAL PROFILE - SEE SYNTHETIC TURF EDGE DETAILS FOR ADDITIONAL PROFILE INFO

NOTES:
1. FIELD VERIFY LOCATION OF AVISTA PRIMARY POWER LINE. COORDINATE WITH IRRIGATION INSTALLATION.

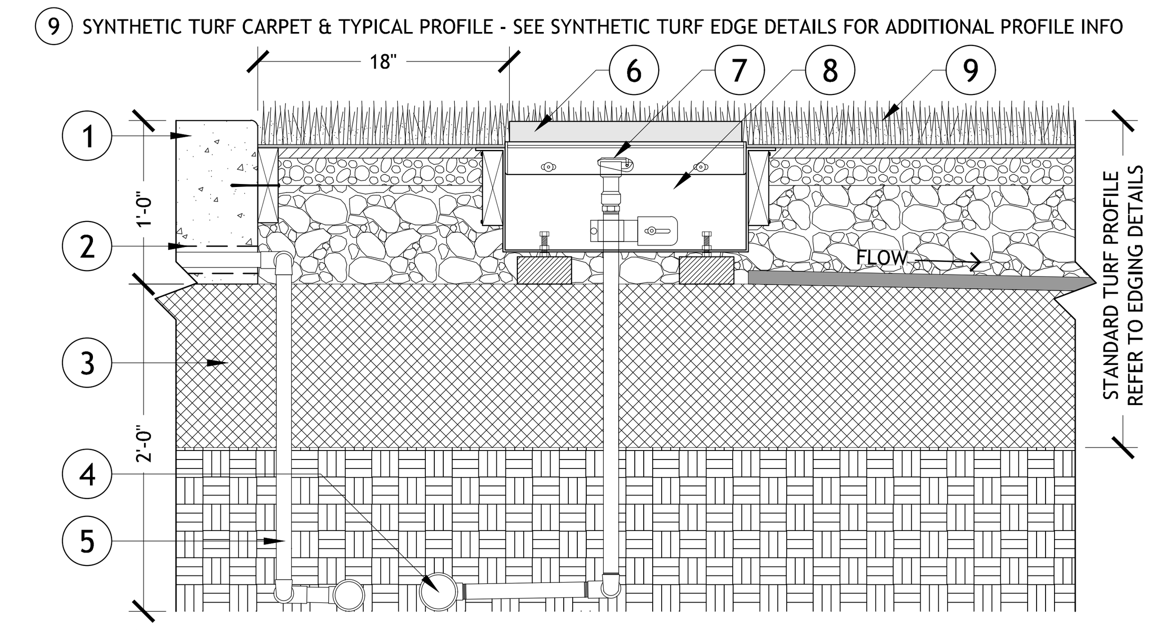

08 QUICK COUPLER IN SYNTHETIC TURF

1" = 1'-0"

1. 2" x 6" COMPOSITE LUMBER NAILER BOARD FASTENED TO CONCRETE w/ 1/4"D x 3"L CONCRETE ANCHOR
2. EXISTING CONCRETE FLATWORK OR ASPHALT
3. 12" x 12" CONCRETE CURB w/ (2) #3 REBAR EDGE REINFORCEMENT CONTINUOUS
4. COMPACTED 5/8" MINUS CRUSHED AGGREGATE BASE
5. CEMENT TREATED SOIL BASE (CTB). SEE CIVIL SHEETS AND SPECIFICATIONS
6. 3 1/4" x 3 1/4" x 18" HOT-DIPPED GALVANIZED SQUARE TUBE STEEL SLEEVE w/ BOTTOM CAP AND DRAIN HOLES TO ACCOMODATE EXISTING BOLLARDS
7. SYNTHETIC TURF PAD SURFACING (TBD)
8. SYNTHETIC TURF CARPET w/ INFILL AS SPECIFIED
9. COMPACTED TOP COURSE AGGREGATE BASE - SEE SPECIFICATIONS
10. COMPACTED BASE COURSE AGGREGATE BASE - SEE SPECIFICATIONS
11. ADS ADVANEDGE FLAT PANEL DRAIN, SLOPE TO DRAINAGE STRUCTURES PER GRADING PLAN(S) - SEE SPECIFICATIONS

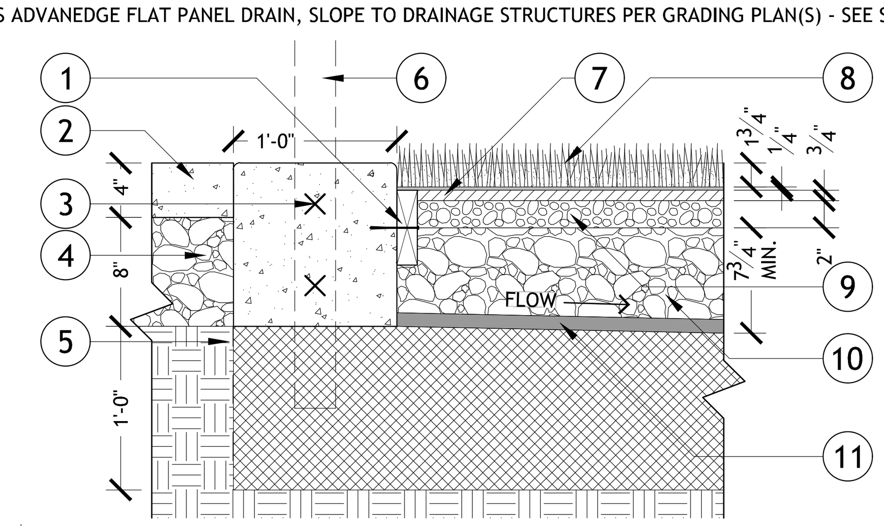

09 SYNTHETIC TURF EDGE - TYPE VII

1" = 1'-0"

1. (6") WIDE SECTION OF VELCRO GLUED TO FIELD CARPET PATCH
2. SPECIFIED DRAIN MAT, SECURE DRAIN MAT CUTOUT PATCH w/ ZIP TIES TO FIELD DRAIN MAT PAD
3. FIELD CARPET SEAM BACKING STRIP, (6") WIDE SECTION GLUED TO FIELD CARPET, (6") WIDE SECTION OVERHANG w/ VELCRO GLUED TO TOP SURFACE TO RECEIVE FIELD TURF PATCH VELCRO
4. COMPACTED TOP COURSE AGGREGATE BASE - SEE SPECIFICATIONS
5. COMPACTED BASE COURSE AGGREGATE BASE - SEE SPECIFICATIONS
6. CEMENT TREATED SOIL BASE (CTB). SEE CIVIL SHEETS & SPECIFICATIONS
7. HELICAL ANCHOR PIER - SEE STRUCTURAL DETAIL #01/SHEET S4.1 & SPECIFICATIONS
8. CUSTOM "SPORTSFIELD SPECIALTIES" TCTSQCV VALVE BOX, MODIFIED SIZE, OPEN BOTTOM

NOTES:
1. FIELD CARPET CUTOUT PATCH SHALL HAVE CONTRASTING COLORED TUFT IN CENTER OF PATCH TO AID IN PLACEMENT AND REMOVAL. COLOR SHALL BE DARK BLUE, SUBMIT SAMPLE FOR APPROVAL.

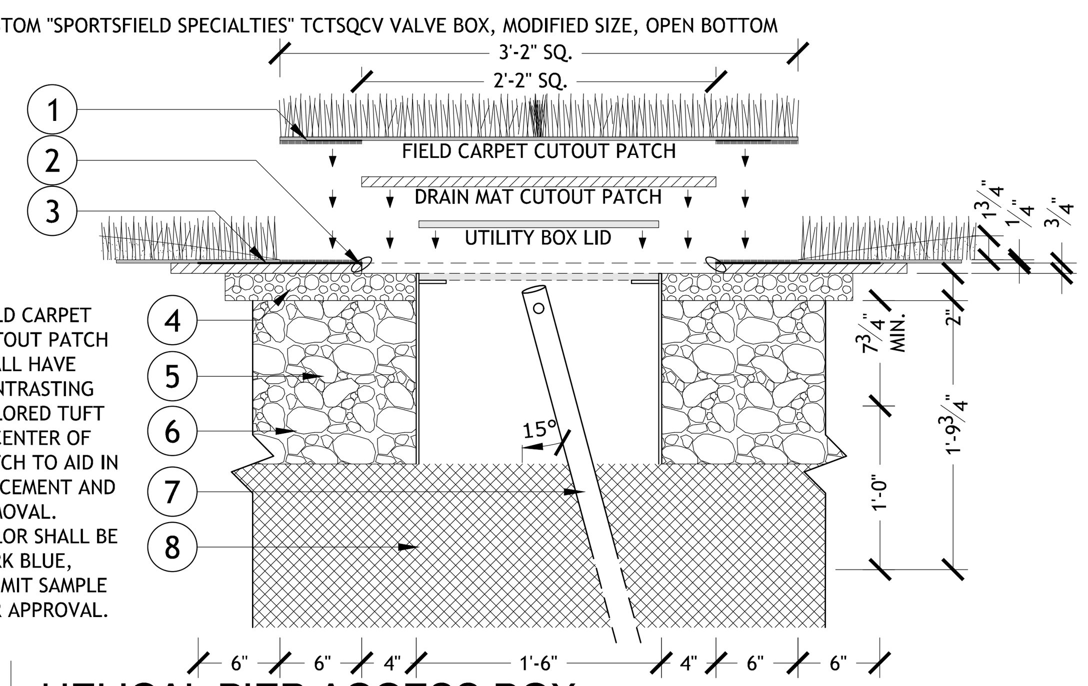

10 HELICAL PIER ACCESS BOX

1" = 1'-0"

1. (6") WIDE SECTION OF VELCRO GLUED TO FIELD CARPET PATCH
2. SPECIFIED DRAIN MAT, SECURE DRAIN MAT CUTOUT PATCH w/ ZIP TIES TO FIELD DRAIN MAT PAD PER MANUFACTURER'S SPECIFICATIONS
3. COMPACTED AGGREGATE COURSES - SEE SPECIFICATIONS
4. CUSTOM "SPORTSFIELD SPECIALTIES" TCTSQCV VALVE BOX w/ LID, MODIFIED SIZE, OPEN BOTTOM
5. SYNTHETIC TURF CARPET w/ INFILL AS SPECIFIED. FIELD CARPET SEAM BACKING STRIP, (6") WIDE SECTION GLUED TO FIELD CARPET, (6") WIDE SECTION OVERHANG w/ VELCRO GLUED TO TOP SURFACE TO RECEIVE FIELD TURF PATCH VELCRO

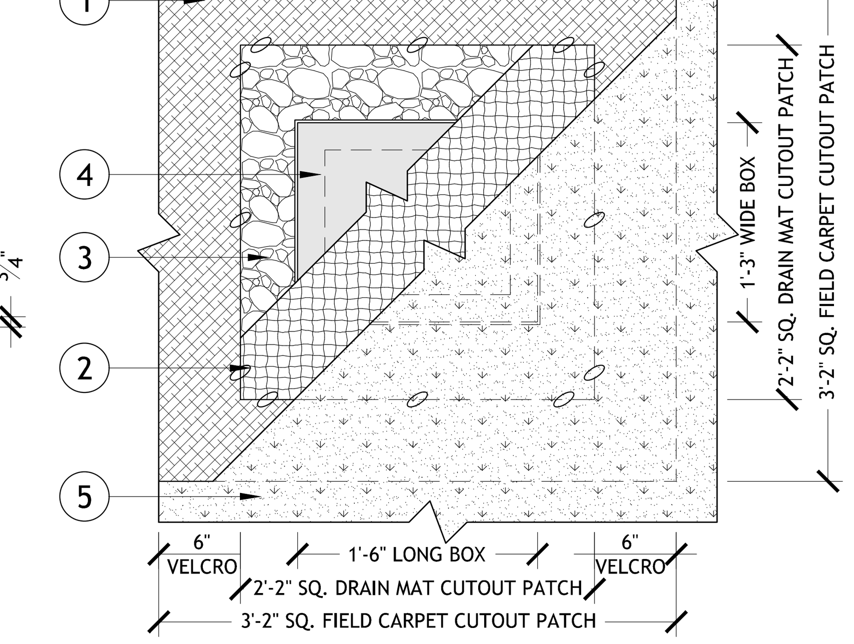

11 HELICAL PIER ACCESS BOX FIELD CARPET PATCH

1" = 1'-0"

1. EDGE RESTRAINT PER PLAN
2. 1-1/2" VERTICAL RUBBER GASKET & BOX LID w/ SYNTHETIC TURF CARPET
3. CUSTOM "SPORTSFIELD SPECIALTIES" TCITQCV VALVE BOX, MODIFIED SIZE w/ LEVELING BOLTS SET ON LEVELING BRICKS (4) PER BOX
4. (6") VERTICAL PVC ISOLATION VALVE ACCESS EXTENSION PIPE
5. SYNTHETIC TURF CARPET & TYPICAL PROFILE - SEE SYNTHETIC TURF EDGE DETAILS FOR ADDITIONAL PROFILE INFO
6. ISOLATION VALVE AS SPECIFIED, SAME SIZE AS MAINLINE
7. IRRIGATION MAINLINE AS SPECIFIED

NOTES:
1. FIELD VERIFY LOCATION OF AVISTA PRIMARY POWER LINE. COORDINATE WITH IRRIGATION INSTALLATION.

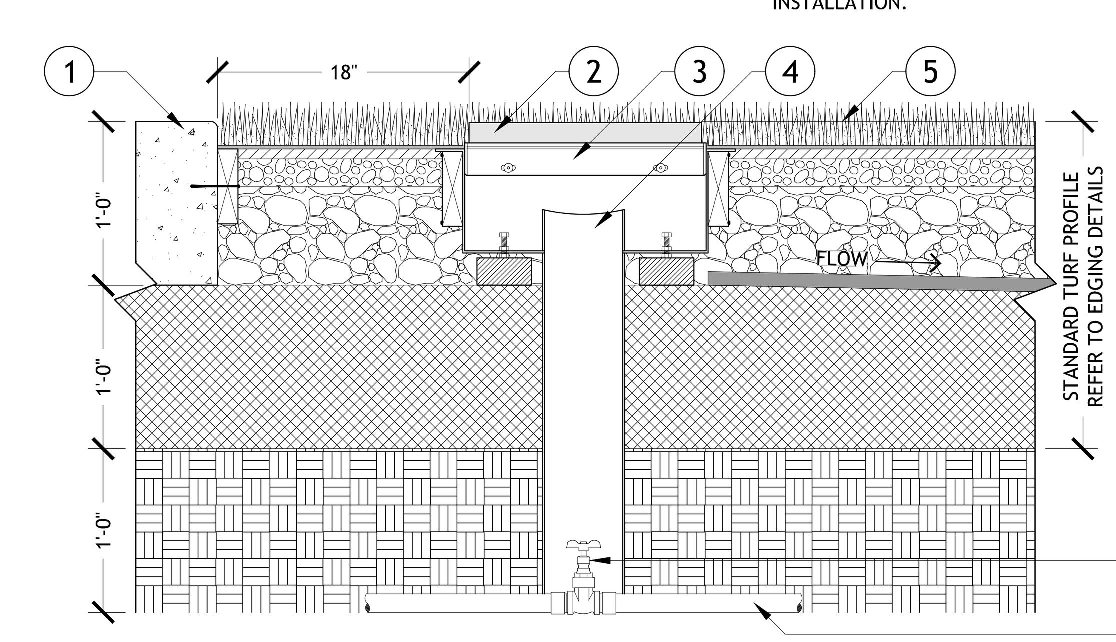

12 ISOLATION VALVE IN SYNTHETIC TURF

1" = 1'-0"

COPYRIGHT BERNARDO WILLS ARCHITECTS,PC 2013

WWW.BERNARDOWILLS.COM
FAX 509.838.4605
509.838.4511
SPOKANE WASHINGTON 99201
153 SOUTH JEFFERSON

BID SET

SITE DETAILS

War Memorial Field Improvements - Phase I

801 Ontario Street
Sandpoint, Idaho 83864

B W A
BERNARDO | WILLS
ARCHITECTS PC

Project No: 19-10-207
Drawn by:
Date: 02-18-2020

L6.1

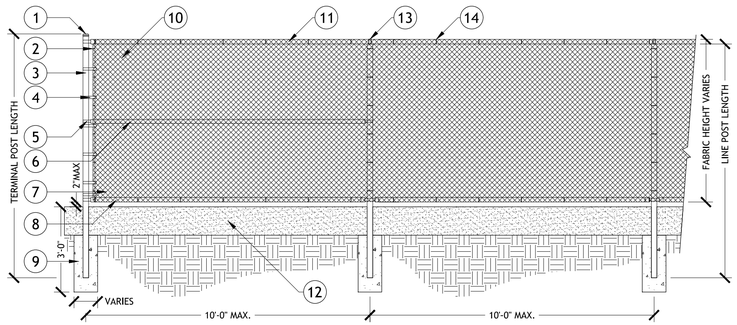

1. DOME POST CAP
2. POST TIES 12" O.C.
3. SCH. 40 TERMINAL POST, SIZE AS SPECIFIED
4. TENSION BAND 12" O.C.
5. BRACE BAND
6. SCH. 40 BRACE RAIL, SIZE AS SPECIFIED
7. TRUSS ROD ADJUSTING UNIT AND TRUSS ROD AS REQUIRED
8. SCH. 40 BOTTOM RAIL w/ RAIL TIES AT 18" O.C., SIZE AS SPECIFIED
9. CONCRETE FOOTING. DIAMETER (4x) POST DIAMETER, MINIMUM 3FT. DEEP, DEPTH AS SPECIFIED
10. CHAIN LINK FABRIC 9 GAUGE, 2" MESH PER SPECIFICATIONS. TOP AND BOTTOM KNUCKLE SELVAGE
11. SCH. 40 TOP RAIL w/ RAIL TIES AT 18" O.C., SIZE AS SPECIFIED
12. CONCRETE EDGING PER PLANS
13. LINE POST LOOP TOP, TYP.
14. RAIL TIE 18" O.C.

01 STANDARD CHAINLINK FENCE w/ TOP & BOTTOM RAIL

3/8" = 1'-0"

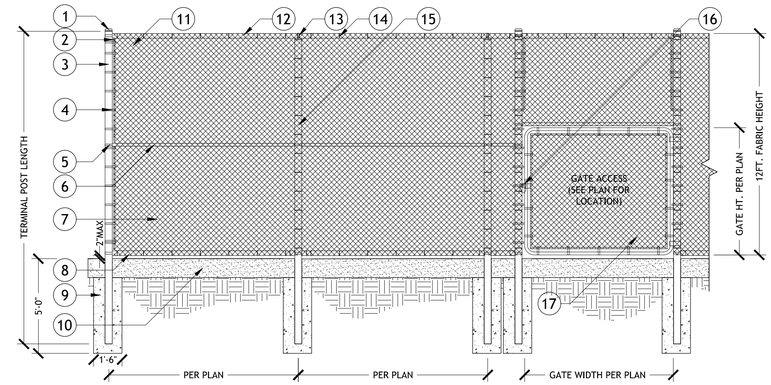

1. DOME POST CAP
2. POST TIES 12" O.C.
3. 3-1/2" O.D. SCH. 40 TERMINAL POST
4. TENSION BAND 12" O.C.
5. BRACE BAND
6. 1-5/8" O.D. SCH. 40 BRACE RAIL
7. TRUSS ROD ADJUSTING UNIT AND TRUSS ROD 3/8" DIA. IF REQUIRED
8. 1-5/8" O.D. SCH. 40 BOTTOM RAIL w/ RAIL TIES AT 18" O.C.
9. CONCRETE FOOTING. DIAMETER (4x) POST DIAMETER, MINIMUM 3FT. DEEP, DEPTH AS SPECIFIED
10. CONCRETE EDGING PER PLANS
11. CHAIN LINK FABRIC 9 GAUGE, 2" MESH PER SPECIFICATIONS. TOP AND BOTTOM KNUCKLE SELVAGE
12. 1-5/8" O.D. SCH. 40 TOP RAIL w/ RAIL TIES AT 18" O.C.
13. LINE POST LOOP TOP, TYP.
14. RAIL TIE 18" O.C.
15. 2-7/8" O.D. SCH. 40 LINE POST
16. LATCH ASSEMBLY & LOCK
17. MANUFACTURER STANDARD GATE CONSTRUCTION

02 12FT. BATTING CAGE FENCE & GATE DETAIL - NORTH ELEVATION

1/4" = 1'-0"

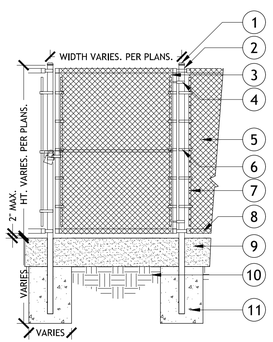

1. DOME POST CAP
2. SCH. 40 TERMINAL POST, SIZE AS SPECIFIED
3. TRUSS RODS, TYP. SIZE AS REQUIRED
4. GATE HINGES, TYP.
5. CHAIN LINK FABRIC 9 GAUGE, 2" MESH PER SPECIFICATIONS. TOP AND BOTTOM KNUCKLE SELVAGE
6. TENSION BAND 12" O.C.
7. POST TIES 12" O.C.
8. SCH. 40 TOP & BOTTOM RAIL, SIZE AS SPECIFIED
9. CONCRETE EDGING PER PLANS
10. UNDISTURBED SUBGRADE, TYP.
11. CONCRETE FOOTING, DIAMETER (4x) POST DIAMETER, MINIMUM 3FT. DEEP, DEPTH AS SPECIFIED

03 STANDARD SINGLE SWING CHAINLINK GATE

3/8" = 1'-0"

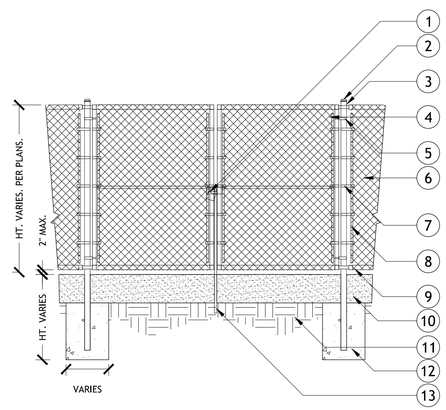

1. LATCH ASSEMBLY & LOCK
2. DOME POST CAP
3. SCH. 40 TERMINAL POST, SIZE AS SPECIFIED
4. TRUSS RODS, TYP. SIZE AS REQUIRED
5. GATE HINGES, TYP.
6. CHAIN LINK FABRIC 9 GAUGE, 2" MESH PER SPECIFICATIONS. TOP AND BOTTOM KNUCKLE SELVAGE
7. TENSION BAND 12" O.C.
8. POST TIES 12" O.C.
9. SCH. 40 TOP & BOTTOM RAIL, SIZE AS SPECIFIED
10. CONCRETE EDGING PER PLANS
11. UNDISTURBED SUBGRADE, TYP.
12. CONCRETE FOOTING, DIAMETER (4x) POST DIAMETER, MINIMUM 3FT. DEEP, DEPTH AS SPECIFIED
13. DROP ROD (CANE STOP) w/ IN-GROUND SLEEVE

04 STANDARD DOUBLE SWING CHAINLINK GATE

3/8" = 1'-0"

COPYRIGHT BERNARDO WILLS ARCHITECTS,PC 2013

STATE OF IDAHO
DAVID R. HAGEN
LICENSED LANDSCAPE ARCHITECT
LA-150
02-18-20

153 SOUTH JEFFERSON SPOKANE WASHINGTON 99201 509.838.4511 FAX 509.838.4605 WWW.BERNARDOWILLS.COM

BID SET

SITE DETAILS

War Memorial Field Improvements - Phase I

801 Ontario Street
Sandpoint, Idaho 83864

B W A BERNARDO | WILLS ARCHITECTS PC

Project No: 19-10-207
Drawn by:
Date: 02-18-2020

L6.2

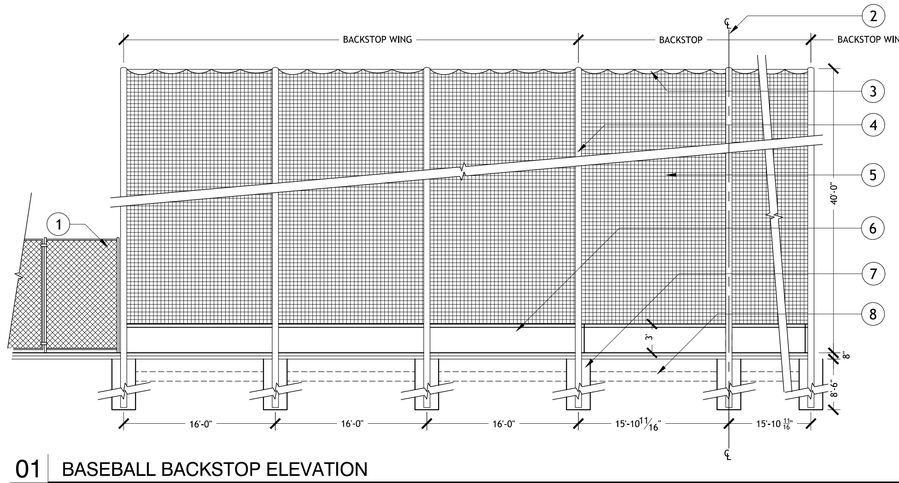

1. 12' CHAIN LINK FENCING. SEE DETAIL 02/SHEET L6.2
2. MIRROR BACKSTOP WING ABOUT THIS BACKSTOP CENTERLINE AXIS
3. CABLE SUSPENDED BETWEEN POLES FOR ATTACHMENT OF NETTING SYSTEM. SEE DETAIL X/X.XX.
4. BACKSTOP NETTING POST. SEE DETAIL 03/SHEET L6.3
5. BACKSTOP NETTING AS SPECIFIED.
6. BACKSTOP WALL. SEE DETAIL 04/SHEET L6.3
7. BACKSTOP NETTING POST FOOTING. SEE DETAIL 03/SHEET L6.3.
8. BACKSTOP WALL FOOTING (BEYOND)

01 BASEBALL BACKSTOP ELEVATION

1/8" = 1'-0"

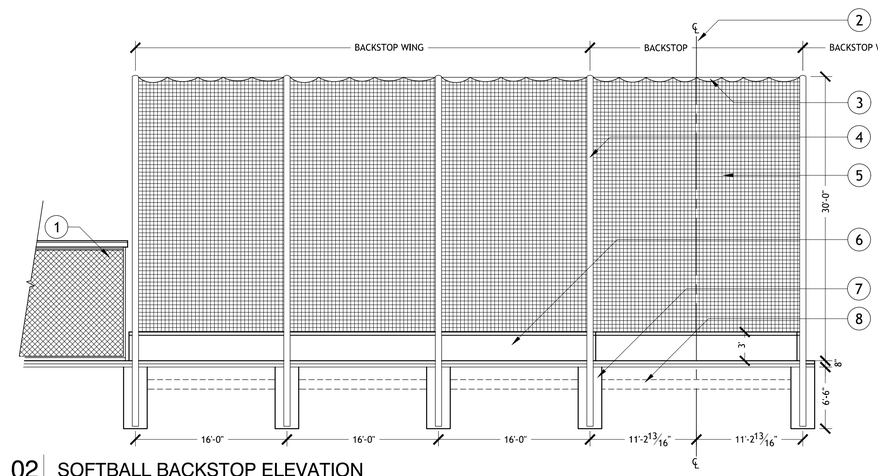

1. CHAIN LINK DUGOUT. PHASE II - NOT IN CONTRACT
2. MIRROR BACKSTOP WING ABOUT THIS BACKSTOP CENTERLINE AXIS
3. CABLE SUSPENDED BETWEEN POLES FOR ATTACHMENT OF NETTING SYSTEM. SEE DETAIL X/X.XX.
4. BACKSTOP NETTING POST. SEE DETAIL 03/SHEET L6.3
5. BACKSTOP NETTING AS SPECIFIED.
6. BACKSTOP WALL. SEE DETAIL 04/SHEET L6.3
7. BACKSTOP NETTING POST FOOTING. SEE DETAIL 03/SHEET L6.3
8. BACKSTOP WALL FOOTING (BEYOND)

02 SOFTBALL BACKSTOP ELEVATION

1/8" = 1'-0"

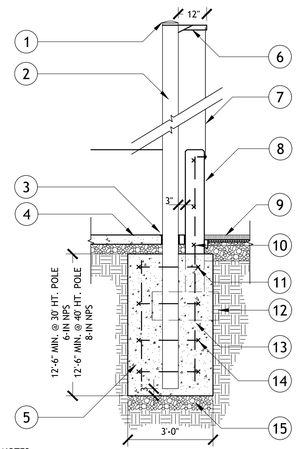

1. WELD CAP TO POST
2. SCH 80 STEEL PIPE (30' POST 6.5" NPS; 40' POST 8.5" NPS. - HEIGHTS LISTED ABOVE GRADE) HOT DIPPED GALVANIZED.
3. EXPANSION JOINT MATERIAL AROUND POST - BY OTHERS N.I.C.
4. CONCRETE FLATWORK BY OTHERS. NOT IN CONTRACT.
5. BACKSTOP NETTING POST FOOTING
6. STAND-OFF BRACKET. 2"X12"X1/4" STEEL PLATE. DRILL 1/2" HOLE FOR STEEL CABLE. SEE DETAIL X/X.XX FOR NETTING ATTACHMENT. GRIND HOLE SMOOTH. WELD TO POST AND GALVANIZE FINISH.
7. BACSTOP NETTING NOT IN CONTRACT.
8. 8" CONCRETE BACKSTOP WALL. SEE DETAIL.
9. SYNTHETIC TURF AND BASE.
10. BENT REBAR EMBED STRUCTURAL DETAIL 3/S4.1.
11. REBAR PER STRUCTURAL DETAIL 3/S4.1
12. BACKSTOP WALL FOOTING (BEYOND)
13. VERTICAL REBAR PER STRUCTURAL DETAIL 3/S4.1
14. HORIZONTAL TIES PER STRUCTURAL DETAIL.
15. 6" DEPTH CRUSHED AGGREGATE BASE
16. REBAR @ C.L. OF 8" WALL (ALTERNATE HOOKS). SECURE IN POST FOOTING. SEE STRUCTURAL DETAIL 3/S4.1

NOTES:
1. SET POST PRIOR TO PLACING BACKSTOP WALL FOOTING, COORDINATE FOOTINGS AS REQUIRED TO AVOID CONFLICT.

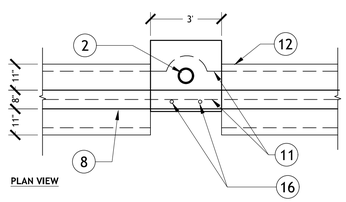

03 BACKSTOP NETTING POST

3/8" = 1'-0"

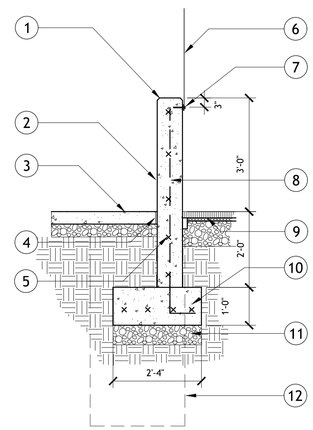

1. CHAMFER 3/4" ALL TOP EDGES.
2. 8" CONCRETE WALL.
3. FUTURE CONCRETE FLATWORK. NOT IN CONTRACT.
4. FUTURE EXPANSION JOINT - NOT IN CONTRACT
5. REBAR - SEE STRUCTURAL DETAIL 4/S4.1
6. BACKSTOP NETTING BY OTHERS WITH VINYL BORDER AND GROMMETS, BOLTED TO BACKSTOP WALL AT BOTTOM. 18-INCH O.C. - NOT IN CONTRACT.
7. 3/8" LAG BOLT AND SHIELD ANCHOR EMBEDDED 3" DEPTH @18" O.C. PLACE WASHER BOTH SIDES OF NETTING. BY OTHERS. NOT IN CONTRACT
8. NO. 4 VERT. REBAR @ 16" O.C. @ C.L. OF 8" WALL (ALTERNATE HOOKS).
9. SYNTHETIC TURF AND BASE.
10. REBAR - SEE STRUCTURAL DETAIL 4/S4.1
11. 6" DEPTH CRUSHED AGGREGATE BASE.
12. BACKSTOP NETTING POST FOOTING BEYOND PER BACKSTOP NETTING POST DETAIL.

NOTE: SEE ALSO STRUCTURAL CONCRETE WALL DETAIL 4/S4.1.

04 BACKSTOP WALL

1/2" = 1'-0"

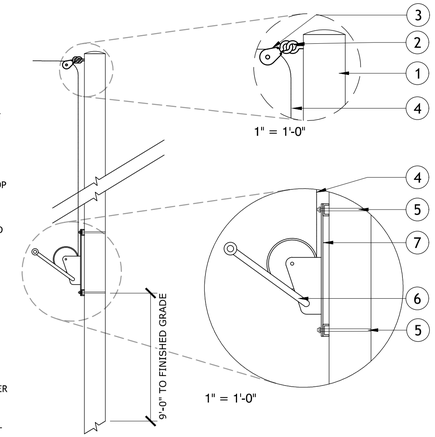

1. 6" DIAM. GALVANIZED POST
2. GALVANIZED EYELET HOOK, WELD TO POST
3. 4" ZINK PLATED 1700-WLL SWIVEL EYE BLOCK PULLEY
4. 3/8" STEEL CABLE
5. GALVANIZED U-BOLTS
6. FULTON SINGLE SPEED 1,600 LB. HAND WINCH MODL # FULTON T16020301
7. 1/4" GALVANIZED WELD PLATE FOR MOUNTING HAND WINCH

05 NETTING CRANK SYSTEM

1/2" = 1'-0"

COPYRIGHT BERNARDO WILLS ARCHITECTS,PC 2013

STATE OF IDAHO
DOUGLAS R. HAYDEN
LICENSED LANDSCAPE ARCHITECT
LA-150
02-18-20

153 SOUTH JEFFERSON SPOKANE WASHINGTON 99201 509.838.4511 FAX 509.838.4605 WWW.BERNARDOWILLS.COM

BID SET

SITE DETAILS

War Memorial Field Improvements - Phase I

801 Ontario Street
Sandpoint, Idaho 83864

BERNARDO | WILLS
ARCHITECTS PC

Project No: 19-10-207
Drawn by:
Date: 02-18-2020

L6.3

SYMBOLS LEGEND

SYMBOL	DESCRIPTION
#	SHEET NOTE
	CONDUIT, VERTICAL TRANSITION
	CONDUIT CAPPED
X:#	HOME RUN X = PANELBOARD # = BRANCH CIRCUIT NUMBER(S)
J	JUNCTION BOX
	SURFACE RACEWAY (DEVICES SHOWN)
	FLUSH FLOOR BOX (DEVICES SHOWN)
	POWER POLE
V	VAULT
	TRANSFORMER
	CURRENT TRANSFORMER
	NORMALLY OPEN CONTACTOR
	NORMALLY CLOSED CONTACTOR
30A/3P	CIRCUIT BREAKER NUMBER INDICATES TRIP AND POLES
30A/3P	DISCONNECT SWITCH
30A	FUSE WITH RATING
30A	FUSED DISCONNECT WITH RATING
	MOTOR THERMAL OVERLOADS
	GROUND CONNECTION
	AUTOMATIC TRANSFER SWITCH
M	POWER METER
R	RELAY
VFD	VARIABLE FREQUENCY DRIVE
X	FEEDER CALLOUT
ID x	LUMINAIRE: ID = FIXTURE TYPE x = SWITCH ASSOCIATION
	2'x4' RECESSED LUMINAIRE
	1'x4' RECESSED LUMINAIRE
	1'X4' SURFACE MTD LUMINAIRE
	PENDANT-MTD/SUSPENDED LUMINAIRE
	WALL-MTD FLUORESCENT LUMINAIRE
	STRIP LIGHTING LUMINAIRE
	CEILING-MTD DIRECTIONAL LUMINAIRE
	CEILING-MTD LUMINAIRE
	TRACK LIGHT WITH NUMBER OF HEADS SHOWN
	WALL-MTD LUMINAIRE
	EXIT SIGN WITH ARROW INDICATING DIRECTION OF EGRESS
	WALL-MTD EXIT SIGN
	CEILING-MTD EXIT SIGN
	BATTERY POWERED EMERGENCY LIGHT
$	SINGLE-POLE WALL SWITCH
PC	PHOTOCELL CONTROL
OS	OCCUPANCY SENSOR
	LIGHTING CONTROL PANEL

SYMBOLS LEGEND

SYMBOL	DESCRIPTION
$X	WALL SWITCH: X = AS FOLLOWS: 3 - THREE-WAY 4 - FOUR-WAY D - DIMMER K - KEY-OPERATED LV/2B - LOW-VOLTAGE 2 BUTTON LV/4B - LOW-VOLTAGE 4 BUTTON LV/D - LOW-VOLTAGE DIMMER LV/2D - LOW-VOLTAGE OCCUPANCY DIMMING LV-O/D - LOW VOLTAGE OCCUPANCY DIMMING LV-OS - LOW-VOLTAGE OCCUPANCY SENSING VS - VACANCY SENSING M - MOTOR STARTER WITH OVERLOADS MC - MOMENTARY CONTACT O - OCCUPANCY SENSOR P - PILOT LIGHT WP - WEATHERPROOF a - LOWER-CASE INDICATES SWITCHING CNTRL
X	RECEPTACLE OUTLET: X = AS FOLLOWS: C - CLOCK HANGER EP - EXPLOSION PROOF G - GROUND FAULT CIRCUIT INTERRUPT S - SAFETY TYPE T - TIMER CONTROLLED WP - WEATHERPROOF
	DUPLEX RECEPTACLE, 125V, 20A
	DOUBLE-DUPLEX RECEPT, 125V, 20A
	CEILING-MTD DUPLEX RECEPTACLE, 125V, 20A
	CEILING-MTD DOUBLE-DUPLEX RECEPTACLE, 125V, 20A
X	SPECIAL PURPOSE RECEPTACLE X = TYPE
M	MOTOR CONNECTION
	EQUIPMENT CONNECTION
	DISCONNECT SWITCH
	FLUSH MOUNTED PANELBOARD
	SURFACE MOUNTED PANELBOARD
	480V PANELBOARD
	208V OR 240V PANELBOARD
T	TRANSFORMER
R	RELAY
XXXX	MECHANICAL EQUIPMENT CALLOUT
X	DATA/TEL OUTLET, 2-PORTS
	WIRELESS ACCESS POINT
C	DOOR CONTACT
CR	CARD READER
K	KEYPAD
MR	SECURITY MONITOR
CAM	CCTV SECURITY VIDEO CAMERA
S	SPEAKER VR- VANDAL RESISTANT
S	WALL-MOUNTED SPEAKER
I	INTERCOM AUDIO MUSIC SOURCE
	CLOCK
OR	PUSH BUTTON
	SMOKE DETECTOR
	HEAT DETECTOR
F	FIRE ALARM MANUAL PULL STATION
	FIRE ALARM HORN STROBE - WALL MOUNTED
	FIRE ALARM HORN STROBE - CEILING MOUNTED
FAAP	FIRE ALARM ANNUNCIATOR PANEL
FACP	FIRE ALARM CONTROL PANEL

ELECTRICAL GENERAL NOTES

THE FOLLOWING GENERAL NOTES APPLY TO ALL DRAWINGS

1. REFER TO SPECIFICATIONS AND ALL OTHER DIVISION DOCUMENTS FOR ADDITIONAL REQUIREMENTS.
2. ELECTRICAL CONTRACTOR SHALL COORDINATE WORK WITH OTHER TRADES.
3. ALL MATERIALS SHALL BE NEW AND SHALL BE LISTED BY UNDERWRITER'S LABORATORIES, INC.
4. CATALOG NUMBERS USED IN SYMBOLS LIST AND FIXTURE SCHEDULE ARE TO BE AS NOTED OR APPROVED EQUALS. MAINTAIN SPECIFIED GRADE.
5. IT IS THE INTENT OF THE ELECTRICAL CONTRACT DOCUMENTS THAT ALL ELECTRICAL SYSTEMS ARE INSTALLED COMPLETE, TESTED AND READY FOR OPERATION, UNLESS SPECIFICALLY NOTED OTHERWISE AND WHETHER OR NOT EVERY ITEM OF EQUIPMENT, DEVICE, BOX, ETC. IS SHOWN ON THE PLANS. ELECTRICAL SUBCONTRACTOR SHALL BE ON THE PREMISES OPENING DAY.
6. LOCATIONS OF ALL DEVICES ARE SHOW SCHEMATICALLY. COORDINATE WITH THE ARCHITECTURAL DRAWINGS, REFLECTED CEILING PLANS, ELEVATIONS AND CASEWORK, SUPPLIER'S SHOP DRAWINGS FOR EXACT LOCATION PRIOR TO ROUGH-IN. WHERE OUTLET GROUPINGS OCCUR, MOUNT BOXES AS CLOSE TO EACH OTHER AS PRACTICAL. OUTLETS SHALL NOT BE MOUNTED BACK TO BACK ON THE SAME WALL, BUT WILL HAVE MINIMUM LATERAL SEPARATION OF 12" OR (1) STUD SPACE. CONNECT OUTLETS WITH FLEX STEEL CONDUIT. ON FIRE WALLS SEPARATION MUST BE 24".
7. SEAL ALL PENETRATIONS IN RATED WALLS, FLOORS AND CEILINGS WITH A UL APPROVED FIRE STOP SYSTEM.
8. PROVIDE A 220 LB NYLON JET PULL STRING IN ALL EMPTY RACEWAYS.
9. PROVIDE EMT RACEWAY FOR WIRING RUNNING THROUGH WALLS, FLOOR, AND CEILINGS. ALL WIRING AND CABLING NOT INSTALLED IN METALLIC RACEWAYS SHALL BE PLENUM RATED.
10. ALL CONDUIT AND RACEWAY SHALL BE RUN CONCEALED UNLESS NOTED OTHERWISE AND SHALL BE RUN PARALLEL OR PERPENDICULAR TO STRUCTURAL MEMBERS, WALLS, CEILINGS, OR FLOORS. NO STRUCTURAL MEMBER SHALL BE CUT OR ALTERED WITHOUT PRIOR APPROVAL OF THE ARCHITECT AND STRUCTURAL ENGINEER.
11. ALL CONDUIT BELOW CONCRETE SLABS SHALL BE RIGID, HOT-DIPPED GALVANIZED STEEL CONDUIT OR RIGID, CODE APPROVED PVC.
12. THE INSTALLATION SHALL COMPLY WITH THE 2017 EDITION OF THE NATIONAL ELECTRICAL CODE (NEC), THE STATE OF WASHINGTON ADMINISTRATIVE CODE, THE AUTHORITY HAVING JURISDICTION, AND UTILITY REQUIREMENTS.
13. THE CONTRACTOR SHALL ENSURE THAT THE ENTIRE ELECTRICAL SYSTEM FOR THIS BUILDING IS GROUNDED IN ACCORDANCE WITH ALL APPLICABLE PROVISIONS OF ARTICLE 250 OF THE N.E.C.
14. WORKING SPACE ABOUT ELECTRICAL PANELS, SWITCHGEAR, ETC SHALL COMPLY WITH NEC ARTICLE 110.26.
15. ALL LUMINAIRES SHALL BE SECURELY FASTENED AND IN COMPLIANCE WITH ARTICLE 410-16 OF THE 2008 NEC.
16. ALL CONDUCTORS SHALL BE COPPER, TYPE THHN/THWN WIRE FOR CONNECTION TO LIGHTING FIXTURES SHALL BE AS REQUIRED BY THE U.L. LABEL. NO.12 AWG SHALL BE THE MINIMUM SIZE USED FOR POWER WIRING. NO.14 AWG MAY BE USED FOR CONTROL WIRING ONLY. 120 AND 277V CIRCUITS IN EXCESS OF 100' SHALL BE #10 AWG (OR LARGER AS INDICATED) FROM PANEL BOARD TO FIRST OUTLET.
17. ALL MULTI-WIRE CIRCUITS SHALL BE WIRED SO DEVICES MAY BE REMOVED WITHOUT BREAKING CONTINUITY OF NEUTRAL CONDUCTOR OR ELSE BE ON A COMMON TRIP BREAKER.
18. PROVIDE UN-SWITCHED PHASE CONDUCTOR TO ALL EXIT SIGNS AND INDICATED LUMINAIRES WITH GENERATOR TRANSFER DEVICES.
19. PROVIDE ALL EXPANSION FITTINGS, PITCH POCKETS, EQUIPMENT SUPPORTS, AND ACCESS DOORS AS REQUIRED FOR ELECTRICAL WORK.
20. PROVIDE EQUIPMENT LABELS FOR DISCONNECT SWITCHES, WIRING TROUGHS, ETC. TO IDENTIFY EQUIPMENT OR EQUIPMENT SERVED. LABELS SHALL BE 1/8" THICK OF PHENOLIC MATERIAL, MACHINE ENGRAVED TO EXPOSE CONTRASTING INNER CORE.
21. MECHANICAL EQUIPMENT POWER CONTROL DEVICES (STARTERS AND COMBINATION STARTERS) AND UNIT DISCONNECTS SHALL BE PROVIDED AND INSTALLED BY THE ELECTRICAL CONTRACTOR UNLESS NOTED OTHERWISE ON THE EQUIPMENT SCHEDULE.
22. ELECTRICAL CONTRACTOR SHALL PAY ALL UTILITY CONNECTION CHARGES.
23. ELECTRICAL CONTRACTOR SHALL ARRANGE ALL INSPECTIONS AND PAY ALL FEES. SUBMIT COPY OF FINAL INSPECTION REPORT TO THE OWNER.
24. NOT ALL LEGEND AND ABBREVIATIONS ARE NECESSARY OR REQUIRED FOR THIS DRAWING SET.
25. WHERE A CONFLICT EXISTS WITHIN THE DOCUMENTS, THE MOST EXPENSIVE OPTION SHALL GOVERN.
26. ELECTRICAL CONTRACTOR SHALL TOUR THE PROJECT SITE PRIOR TO BID TO ASSESS EXISTING CONDITIONS, WHICH MAY AFFECT HIS BID. LATER CLAIMS FOR WORK THAT WAS EVIDENT WILL NOT BE ALLOWED.
27. ITEMS NOTED AS "TYPICAL" ON ANY DRAWING REFERS TO ALL DRAWINGS.
28. NO STRUCTURAL MEMBERS SHALL BE CUT OR ALTERED WITHOUT PRIOR APPROVAL OF THE ARCHITECT AND STRUCTURAL ENGINEER.
29. ALL RACEWAYS WITHIN THE BUILDING SHALL BE RUN OVERHEAD U.O.N. RACEWAYS SHALL NOT BE RUN UNDER THE FLOOR SLAB UNLESS SPECIFICALLY SHOWN ON THE DRAWINGS.
30. NO RACEWAYS SHALL BE RUN IN FLOOR SLABS.
31. FIRST FLOOR HOMERUNS (TO THE FIRST DEVICE) MAY BE RUN UNDER THE SLAB IN 1" PVC.
32. LOCATIONS OF ALL WALL MOUNTED DEVICES ARE SHOWN SCHEMATICALLY. COORDINATE WITH THE ARCHITECTURAL DRAWINGS, ELEVATIONS AND CASEWORK SUPPLIERS SHOP DRAWINGS FOR EXACT LOCATION OF DEVICES PRIOR TO ROUGH-IN.
33. ALL RACEWAYS IN FINISHED SPACES SHALL BE CONCEALED.
34. PROVIDE 2" EMT SLEEVES FOR LOW VOLTAGE WIRING RUNNING THROUGH NON-RATED WALLS, FLOORS AND CEILINGS.
35. PROVIDE STI "EZ-PATH" ASSEMBLIES AT EACH LOCATION WHERE LOW VOLTAGE WIRING PENETRATES A RATED WALL OR CEILING. ASSUME 50 ARE TO BE PROVIDED.
36. PROVIDE A COMPLETE DESIGN-BUILD PATHWAY SYSTEM FOR ALL SPECIAL SYSTEMS WIRING, SEE SPECIFICATIONS. QUANTITY AND SIZE OF RACEWAYS SHOWN ON SPECIAL SYSTEMS PLANS ARE THE MINIMUM TO BE PROVIDED. CONTRACTOR SHALL PROVIDE ALL RACEWAYS AS REQUIRED.
37. ALL LOW VOLTAGE WIRING NOT RUN IN A METALLIC RACEWAY SHALL BE PLENUM RATED.
38. ALL EQUIPMENT, LUMINAIRES, RACEWAYS, DEVICES, ETC. SHALL BE UL LISTED.
39. MOUNT ALL DEVICES ABOVE COUNTERS 6" ABOVE BACKSPLASH UNLESS NOTED OTHERWISE.
40. WHERE A CONFLICT EXISTS THE MOST EXPENSIVE OPTION SHALL GOVERN.
41. PROVIDE ALL RACEWAYS AND WIRING REQUIRED TO INSTALL ELECTRONIC DOOR HARDWARE. REFER TO DOOR HARDWARE SPECIFICATIONS, SCHEDULES AND DIAGRAMS.

ABBREVIATIONS

LETTER	NAME
Ø	PHASE
A	ABOVE COUNTER / AMPERE
AFF	ABOVE FINISHED FLOOR
BFC	BELOW FINISHED CEILING
AL	ALUMINUM
AMP	AMPERE
ATS	AUTOMATIC TRANSFER SWITCH
AWG	AMERICAN WIRE GAUGE
B	BELOW COUNTER
BLDG	BUILDING
BOD	BOTTOM OF DEVICE
CB	CIRCUIT BREAKER
CKT	CIRCUIT
CLK	CLOCK
COD	CENTER OF DEVICE
CO	CONDUIT ONLY
COMM	COMMUNICATIONS
CT	CURRENT TRANSFORMER
CU	COPPER
DIA	DIAMETER
DISC	DISCONNECT
DN	DOWN
DW	DISHWASHER
E	EXISTING TO REMAIN
EA	EACH
EGC	EQUIPMENT GROUNDING CONDUCTOR
ELEC	ELECTRIC
ELEV	ELEVATION
EMT	ELECTRICAL METALLIC CONDUIT
ENCL	ENCLOSURE
EQPM	EQUIPMENT
ER	EXISTING TO BE REMOVED
EXP	EXPLOSION PROOF
EXST	EXISTING
FA	FIRE ALARM
FDR	FEEDER
FLA	FULL LOAD AMPERES
FO	FIBER OPTIC
G	GROUND FAULT CIRCUIT INTERRUPT/GROUND
GALV	GALVANIZED
GEN	GENERATOR
GFP	GROUND FAULT PROTECTION
GND	GROUND
HH	HANDHOLE
HP	HORSEPOWER
HZ	HERTZ (CYCLES PER SECOND)
IC	INTERRUPTING CAPACITY
IG	ISOLATED GROUND
IN	INCH / INCHES
JBOX	JUNCTION BOX
KVA	KILO-VOLT-AMPERE
KW	KILOWATT
KWH	KILOWATT-HOUR
LC	LIGHTING CONTROL
MAX	MAXIMUM
MCC	MOTOR CONTROL CENTER
MECH	MECHANICAL
MFR	MANUFACTURER
MGB	MASTER GROUND BAR
MH	MANHOLE
MIN	MINIMUM
MTD	MOUNTED
MW	MICROWAVE
N	NEUTRAL
NC	NORMALLY CLOSED
NEC	NATIONAL ELECTRIC CODE
NEMA	NATIONAL EQUIP. MANUFACTURER'S ASSOC.
NEUT	NEUTRAL
NIC	NOT IN CONTRACT
NL	NIGHT LIGHT
NO	NORMALLY OPEN
NTS	NOT TO SCALE
OC	ON CENTER
OL	OVERLOAD
PB	PULL BOX
PKG	PACKAGE
PNL	PANEL
PWR	POWER
R	EXISTING TO BE RELOCATED
RCPT	RECEPTACLE
REF	REFRIGERATOR
REV	REVISION
RM	ROOM
SHT	SHEET
SIM	SIMILAR
SPD	SURGE PROTECTIVE DEVICE
SPKR	SPEAKER
STBY	STANDBY
SW	SWITCH
SWBD	SWITCHBOARD
SWGR	SWITCHGEAR
SYS	SYSTEM
TBB	TELEPHONE BONDING BACKBONE
TEL	TELEPHONE
THRU	THROUGH
TOD	TOP OF DEVICE
TGB	TELECOMMUNICATIONS GROUND BAR
TMGB	TELECOMMUNICATIONS MAIN GROUND BAR
TV	TELEVISION
TYP	TYPICAL
UG	UNDERGROUND
UH	UNIT HEATER
UPS	UNINTERRUPTIBLE POWER SUPPLY
VFY	VERIFY
VFD	VARIABLE FREQUENCY DRIVE
VR	VANDAL RESISTANT
WP	WEATHERPROOF
XFMR	TRANSFORMER
Z	IMPEDANCE

DEVICE MOUNTING HEIGHTS

SPECIAL OUTLET HEIGHTS ARE SHOWN ON THE ELECTRICAL DRAWINGS OR ON THE ARCHITECTURAL DRAWINGS. IF SPECIAL OUTLET HEIGHTS ARE NOT SHOWN OR REQUIRED, THEN LOCATE OUTLETS AS NOTED BELOW. OUTLET HEIGHTS ARE MEASURED FROM THE FINISHED FLOOR TO THE CENTERLINE OF THE OUTLET UNLESS OTHERWISE NOTED.

DEVICE	MOUNTING HEIGHT
RECEPTACLES	18 INCHES VERITCALLY MOUNTED
ABOVE COUNTER ELECTRICAL DEVICES	6" ABOVE COUNTER TO BOTTOM OF DEVICE
LIGHT SWITCHES	48 INCHES VERTICALLY MOUNTED
PANELBOARDS	72 INCHES TO TOP OF PANELBOARD
TELEPHONE OUTLET - DESK	18 INCHES VERTICALLY MOUNTED
TELEPHONE OUTLET - WALL	54 INCHES VERTICALLY MOUNTED
COMPUTER OUTLET - DESK	18 INCHES VERTICALLY MOUNTED
FIRE ALARM PULL STATION	48 INCHES
INTERCOM CALL BUTTON	48 INCHES
DIGITAL CLOCK/SPEAKER	PER ARCHITECTURAL INTERIOR ELEVATIONS
ANALOG CLOCK	PER ARCHITECTURAL INTERIOR ELEVATIONS
CATV OUTLET	18 INCHES VERTICALLY MOUNTED
KEYPAD/CARD READER	48 INCHES
FIRE ALARM HORN, STROBE OR HORN/STROBE	NOT LESS THAN 80" OR GREATER THAN 96" TO THE BOTTOM
FIRE ALARM CONTROL PANEL	72 INCHES
DOOR OPERATOR PUSH BUTTON	48 INCHES OR AS SHOWN ON ARCHITECTURAL ELEVATIONS

SHEET INDEX

Sheet Number	Sheet Title
E1.0	ABBREVIATIONS, GENERAL NOTES AND SHEET INDEX
E1.1	DEMO ELECTRICAL SITE PLAN
E1.2	ELECTRICAL SITE PLAN
E1.3	ENLARGED ELECTRICAL SITE PLAN
E5.1	ELECTRICAL DETAILS
E6.1	ELECTRICAL SCHEDULES AND ONE-LINES
E6.2	SCHEDULES
E8.1	REFERENCE ONLY
E8.2	REFERENCE ONLY
E8.3	REFERENCE ONLY
E8.4	REFERENCE ONLY

COPYRIGHT BERNARDO WILLS ARCHITECTS,PC 2013

PROFESSIONAL ENGINEER
LICENSED
17253
2-17-20
STATE OF IDAHO
ZACHARY L. YARBROUGH

COFFMAN ENGINEERS
800 F Street
Anchorage, AK 99501
ph 907.276.6664
www.coffman.com
AECC249

153 SOUTH JEFFERSON SPOKANE WASHINGTON 99201 509.838.4511 FAX 509.838.4605 WWW.BERNARDOWILLS.COM

BERNARDO | WILLS
ARCHITECTS PC
BWA

BID SET
ABBREVIATIONS, GENERAL NOTES AND SHEET INDEX

War Memorial Field Enhancements

Ontario Street
Sandpoint, Idaho

Project No: 19-10-207
Drawn by: ACB
Date: 02-18-2020

E1.0

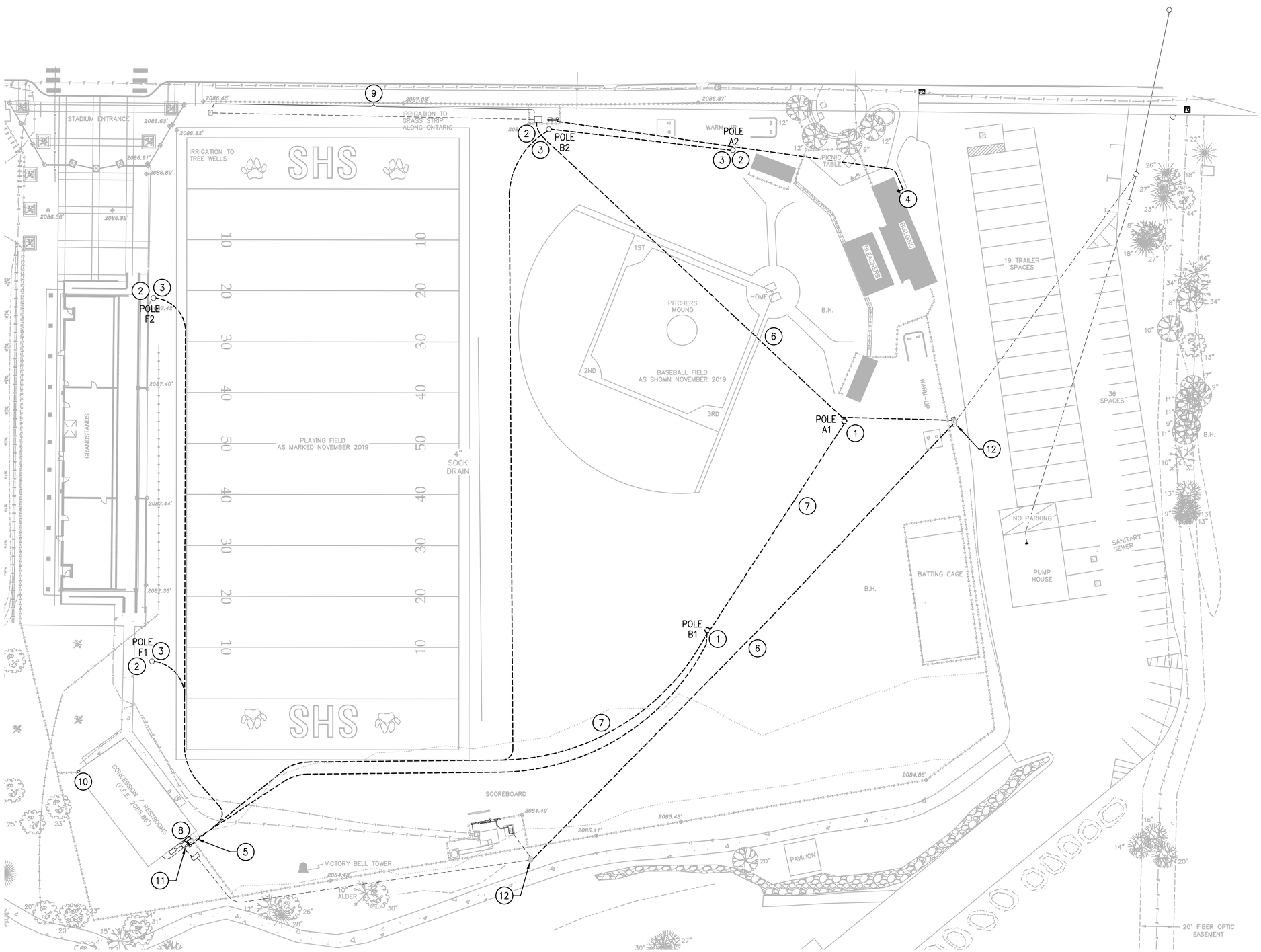

NORTH

DEMO ELECTRICAL SITE PLAN

SCALE: 1" = 30'-0"

0 30 60

GENERAL NOTES

1. ALL WORK SHALL COMPLY WITH THE CURRENT EDITION OF THE NEC AS ADOPTED BY THE STATE OF IDAHO OR THE LOCAL AUTHORITY HAVING JURISDICTION.
2. COORDINATE DEMO AND NEW UTILITY WITH AVISTA UTILITIES:
   ROB SHERRILL (208) 265-6958
   ELECTRICAL CONTRACTOR SHALL PROVIDE TRENCHING, CONDUIT AND BACKFILL FOR ALL NEW AVISTA UTILITY PRIMARY LINES.

KEY NOTES

1. EXISTING FIELD LIGHTING LUMINARIES AND POLE SHALL BE UNINSTALLED AND STORED TO BE REINSTALLED IN NEW LOCATION. SEE ELECTRICAL SHEET E1.2 FOR NEW LOCATION OF POLE.
2. EXISTING FIELD LIGHT POLE SHALL BE PROTECTED THROUGH OUT THE DURATION OF CONSTRUCTION.
3. DISCONNECT EXISTING POWER CONDUIT SERVING EXISTING TO REMAIN FIELD LIGHT 3 FEET OUT FROM POLE BASE AND PROTECT END FOR RECONNECT TO NEW CONDUIT. REMOVE REST OF CONDUIT AND CONDUCTORS BACK TO MUSCO CONTROL PANEL.
4. EXISTING BASEBALL CONCESSIONS BUILDING TO BE REMOVED. DEMO EXISTING ELECTRICAL PANEL. REMOVE CONDUIT AND FEEDERS BACK TO NORTH SERVICE DISTRIBUTION PANEL.
5. PULLBACK AND CAP EXISTING (2) 2"C COMMUNICATION CONDUITS. CONDUITS TO BE EXTEND DURING PROJECT SEE SHEET E1.2 FOR REROUTING OF CONDUITS.
6. AVISTA 13.2KV PRIMARY CONDUIT AND FEEDERS, COORDINATE THE REMOVAL OF THE FEEDERS WITH AVISTA AFTER NEW PRIMARY ROUTE IS INSTALLED. DEMO CONDUIT IF EXPOSED DURING GRADING OTHERWISE ABANDON IN PLACE.
7. REMOVE FILED LIGHT POLE POWER CONDUIT AND CONDUCTORS BACK TO MUSCO CONTROL PANEL.
8. REMOVE EXISTING MUSCO LIGHT CONTROL PANEL AND REPLACE WITH NEW, SEE SHEET E1.3.
9. EXISTING UNDERGROUND 13.2KV AVISTA PRIMARY LINE. PROTECT AND PRESERVE THROUGH OUT CONSTRUCTION PROCESS.
10. EXISTING TELEPHONE SERVICE EQUIPMENT LOCATION.
11. EXISTING TELECOMMUNICATION PULL BOX.
12. EXISTING 13.2KV AVISTA JUNCTION ENCLOSURE. PROTECT AND PRESERVE THROUGH OUT THE CONSTRUCTION PROCESS.

PROFESSIONAL ENGINEER LICENSED 03-17-20 STATE OF IDAHO ZACHARY L. YARBROUGH

COPYRIGHT BERNARDO WILLS ARCHITECTS.PC 2013

COFFMAN ENGINEERS
800 F Street
Lewiston, ID 83501
ph 509.838.4511
www.coffman.com
AECC249

153 SOUTH JEFFERSON SPOKANE WASHINGTON 99201 509.838.4511 FAX 509.838.4605 WWW.BERNARDOWILLS.COM

BERNARDO | WILLS ARCHITECTS PC
BWA

BID SET
DEMO ELECTRICAL SITE PLAN

War Memorial Field Enhancements

Ontario Street
Sandpoint, Idaho

Project No: 19-10-207
Drawn by: ACB
Date: 02-18-2020

E1.1

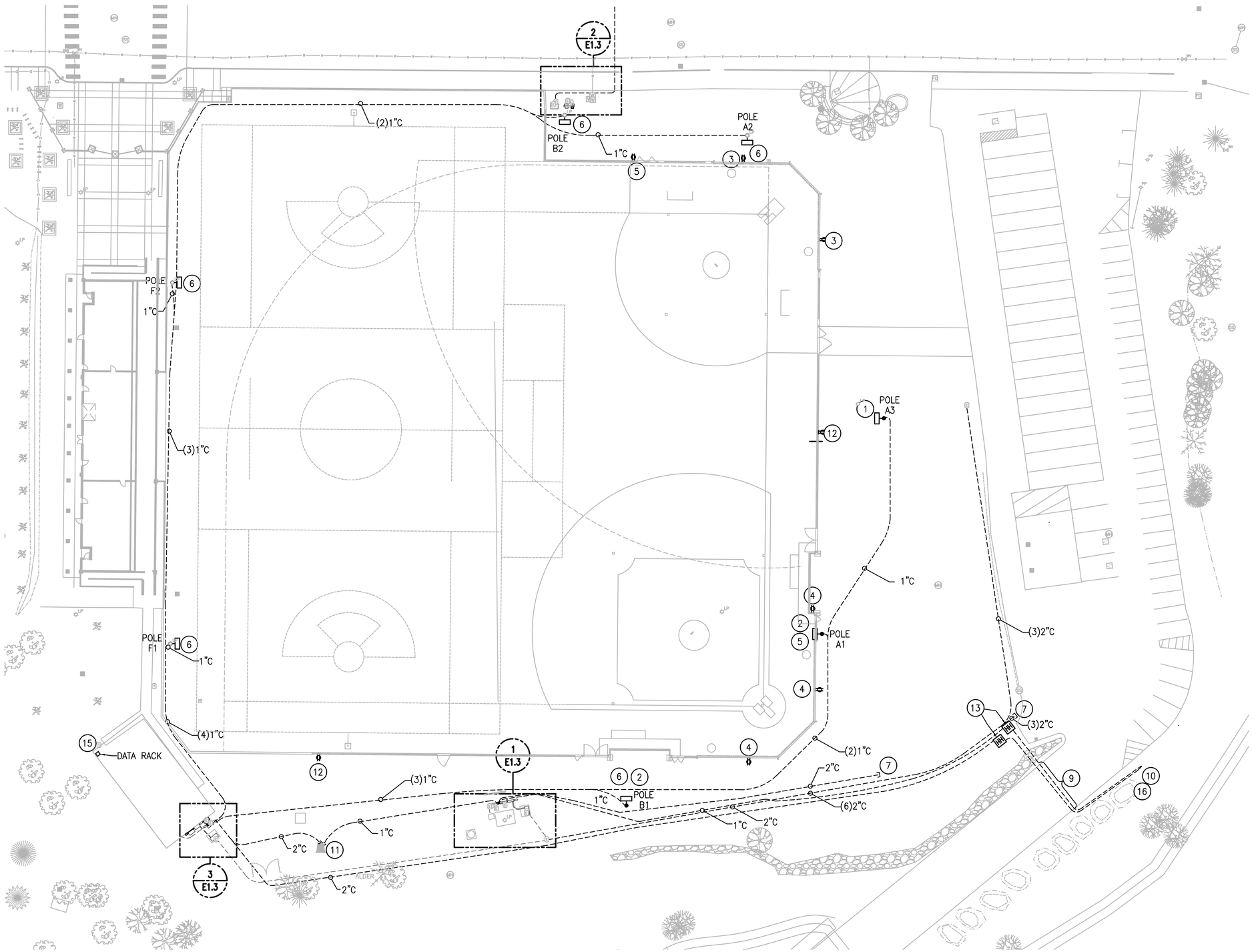

GENERAL NOTES

1. ALL WORK SHALL COMPLY WITH THE CURRENT EDITION OF THE NEC AS ADOPTED BY THE STATE OF IDAHO OR THE LOCAL AUTHORITY HAVING JURISDICTION.
2. COORDINATE DEMO AND NEW UTILITY WITH AVISTA UTILITIES:
   ROB SHERRILL (208) 265-6958
   ELECTRICAL CONTRACTOR SHALL PROVIDE TRENCHING, CONDUIT AND BACKFILL FOR ALL NEW AVISTA UTILITY PRIMARY LINES.

KEY NOTES

1. NEW FIELD LIGHT POLE - PROVIDE NEW POLE, POLE BASE AND LED LUMINAIRES.
2. RELOCATED FIELD LIGHT POLE. PROVIDE NEW POLE BASE PER DETAIL 1 ON SHEET E5.1. REPLACE EXISTING METAL HALIDE LUMINAIRE WITH NEW LED LUMINAIRE FROM MUSCO LIGHTING. SEE SHEET E8.1-4 FOR ADDITIONAL FIELD LIGHT INFORMATION.
3. PROVIDE NEW RECEPTACLE IN A LOCKABLE NEMA 3R ENCLOSURE. SEE ELECTRICAL DETAIL 3 ON SHEET E5.1. PROVIDE A 1" CONDUIT TO ELECTRICAL PANEL N.
4. PROVIDE NEW RECEPTACLE WITH A LOCKABLE NEMA 3R COVER. SEE ELECTRICAL DETAIL 3 ON SHEET E5.1. PROVIDE A 1" CONDUIT TO ELECTRICAL PANEL S. SHOWN ON THE SOUTH SERVICE ELECTRICAL PLAN ON SHEET E1.3
5. PROVIDE NEW RECEPTACLE IN A LOCKABLE NEMA 3R ENCLOSURE. SEE ELECTRICAL DETAIL 2 ON SHEET E5.1. REROUTE TO PANEL N.
6. REPLACE EXISTING METAL HALIDE LUMINAIRE WITH NEW LED LUMINAIRE FROM MUSCO LIGHTING. SEE SHEET E8.1-4 FOR ADDITIONAL FIELD LIGHT INFORMATION.
7. CAP CONDUIT WITH METALLIC CAP. CONDUIT TO BE USED DURING PHASE 2 OF CONSTRUCTION.
8. NOT USED.
9. SAWCUT ACROSS EXISTING ASPHALT TO ROUT CONDUIT . PATCH ASPHALT AFTER CONDUIT IS INSTALLED.
10. NEW OSPREY POLE ROUTE CONDUITS UP POLE TO CONTROL CABINET AND TERMINATE POWER CIRCUIT AND DATA CONNECTION.
11. STUB UP AND CAP CONDUIT AT BASE OF VICTORY BELL FOR FUTURE USE.
12. PROVIDE NEW RECEPTACLE IN A LOCKABLE NEMA 3R ENCLOSURE. SEE ELECTRICAL DETAIL 2 ON SHEET E5.1. REROUTE TO PANEL S.
13. PROVIDE A CARSON 1027 HANDHOLE OR APPROVED EQUAL WITH LOCKING HDPE COVER.
14. INTERCEPT EXISTING COMMUNICATION CONDUITS TO OSPREY NEST POLE AND LIBERTY BELL.
15. PROVIDE A NEW WALL MOUNTED DATA RACK. CHATSWORTH# 25504-712 OR APPROVED.
16. PROVIDE (2) OUTSIDE PLANT RATED CAT6 CABLE FROM OSPREY POLE CAMERA TO NEW DATA RACK.

NORTH

ELECTRICAL SITE PLAN

SCALE: 1" = 30'-0"

0 30 60

COPYRIGHT BERNARDO WILLS ARCHITECTS,PC 2013

PROFESSIONAL ENGINEER LICENSE NO. 23-17-20 STATE OF IDAHO ZACHARY L. YARBROUGH

COFFMAN ENGINEERS
AECC249
800 F Street
Anchorage, AK 99501
ph 907.276.6664
www.coffman.com

153 SOUTH JEFFERSON SPOKANE WASHINGTON 99201 509.838.4511 FAX 509.838.4605 WWW.BERNARDOWILLS.COM

BERNARDO | WILLS ARCHITECTS PC

BID SET

War Memorial Field Enhancements

Ontario Street
Sandpoint, Idaho

ELECTRICAL SITE PLAN

Project No: 19-10-207
Drawn by: ACB
Date: 02-18-2020

E1.2

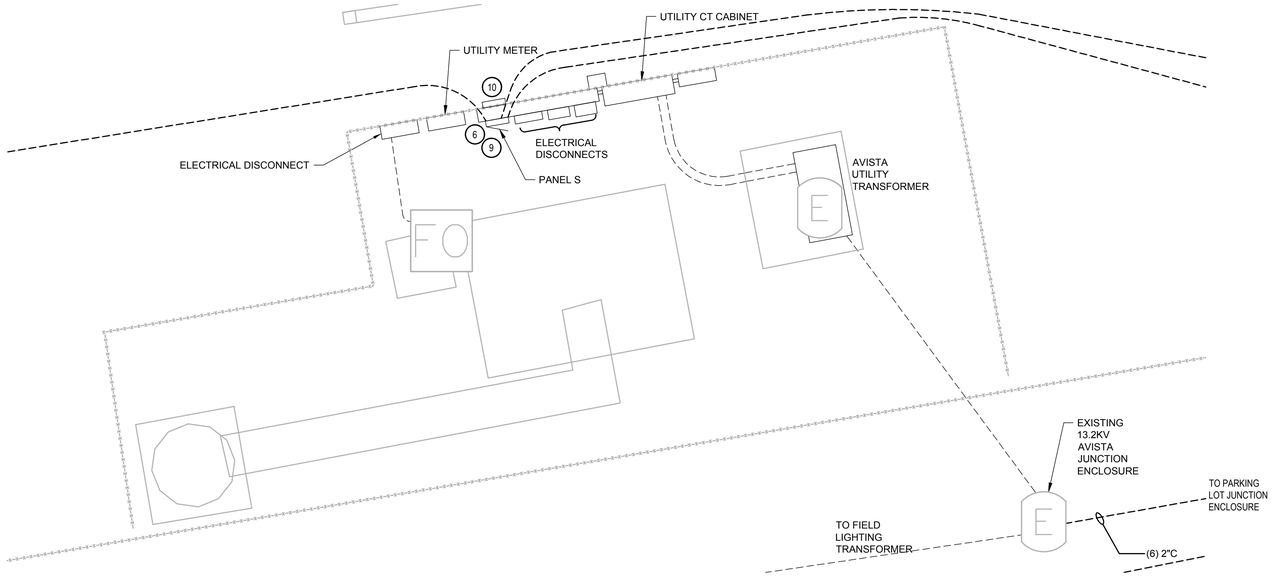

NORTH

SOUTH SERVICE ELECTRICAL PLAN

SCALE: 1/4" = 1'-0"

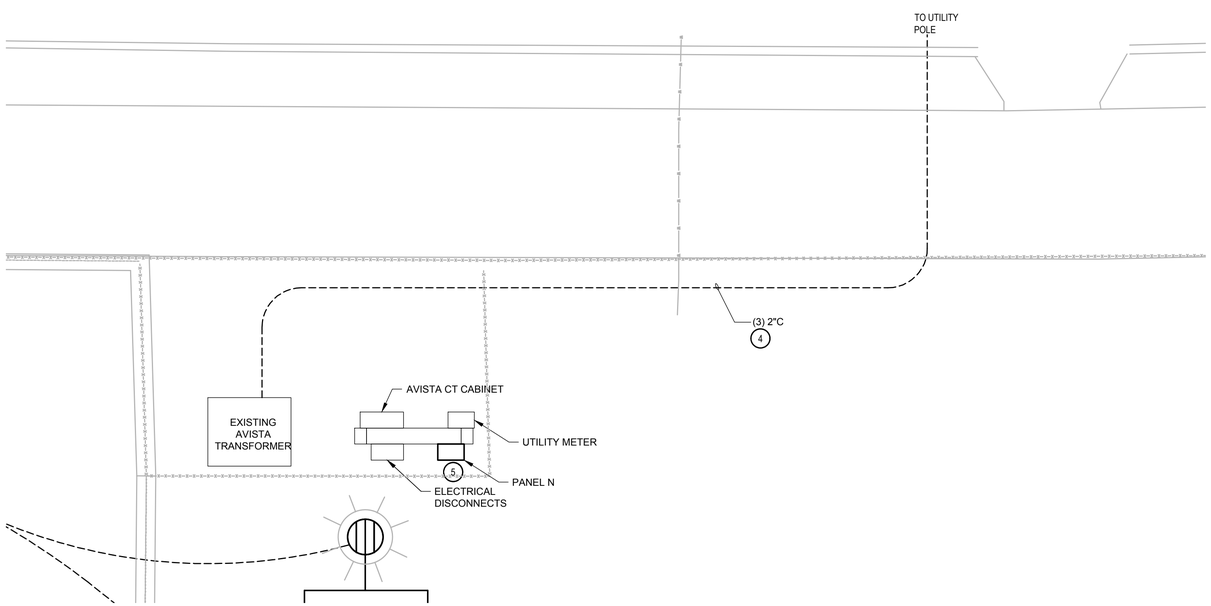

NORTH

NORTH SERVICE ELECTRICAL PLAN

SCALE: 1/4" = 1'-0"

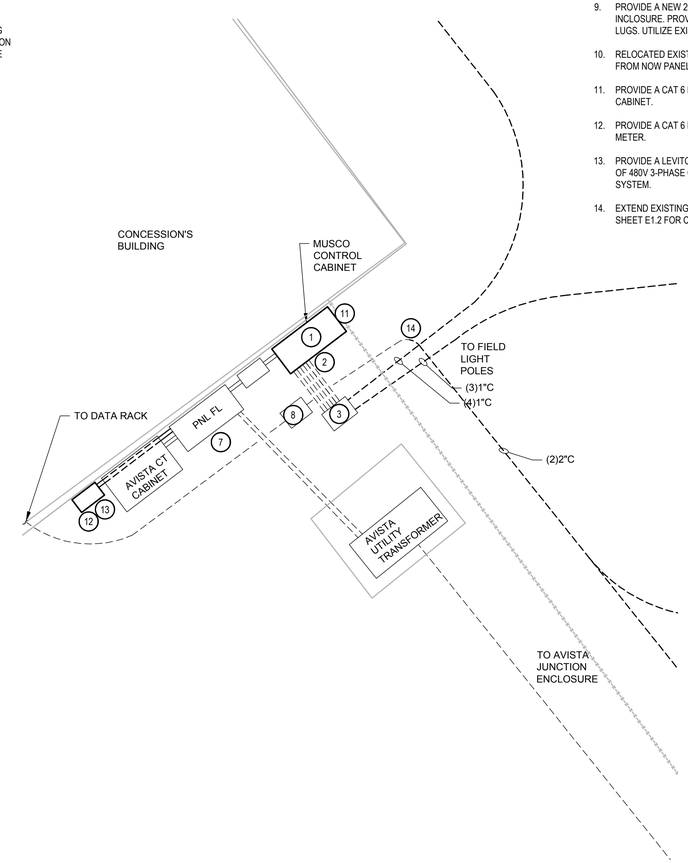

NORTH

CONCESSION BLDG ELECTRICAL YARD PLAN

SCALE: 1/4" = 1'-0"

GENERAL NOTES

1. ALL WORK SHALL COMPLY WITH THE CURRENT EDITION OF THE NEC AS ADOPTED BY THE STATE OF IDAHO OR THE LOCAL AUTHORITY HAVING JURISDICTION.

KEY NOTES

1. REPLACE EXISTING MUSCO LIGHTING CONTROL CABINET WITH NEW MUSCO LIGHTING CONTROL CABINET. RECONNECT EXISTING CONDUITS TO NEW CABINET.
2. PROTECT, MAINTAIN, AND REUSE EXISTING CONDUITS.
3. PROTECT EXISTING ELECTRICAL PULL BOX.
4. NEW AVISTA SERVICE. AVISTA TO BORE CONDUIT UNDER STREET TO UTILITY POLE. COORDINATE AMOUNT OF TRENCHING AND CONDUIT WITH AVISTA.
5. EXISTING 240/120V, 1Φ BOARD. ADD NEW CIRCUIT BREAKERS PER PANEL SCHEDULES ON SHEET E6.2.
6. DISCONNECT EXISTING NEMA 3R 200A DISCONNECT, AND RELOCATE TO LOCATION SHOWN ON PLANS. MAINTAIN AND PROTECT EXISTING FEEDER.
7. ADD CIRCUIT BREAKER TO PANEL FL TO SERVE FIELD LIGHT POLES. SEE PANEL SCHEDULE FOR NEW CIRCUIT BREAKERS ON SHEET 6.2.
8. PROTECT EXISTING COMMUNICATION PULL BOX.
9. PROVIDE A NEW 200A, 208/120V, 3Φ PANEL BOARD "S" WITH NEMA 3R INCLOSURE. PROVIDE WITH 200A MAIN. CIRCUIT BREAKER AND FEED-THUR LUGS. UTILIZE EXISTING FEEDERS TO SERVE PANEL.
10. RELOCATED EXISTING DISCONNECT SWITCH PROVIDE A 2"C-4#3Ø, 1#6G FROM NOW PANEL"S" FEED-THRU LUGS TO DISCONNECT.
11. PROVIDE A CAT 6 DATA CABLE FROM DATA RACK TO MUSCO CONTROL CABINET.
12. PROVIDE A CAT 6 DATA CABLE FROM DATA RACK TO USER ELECTRICAL METER.
13. PROVIDE A LEVITON USER METER IN A NEMA 3R ENCLOSURE WITH (2) SETS OF 480V 3-PHASE CT TO CAPTURE THE ENERGY USAGE OF THE LIGHTING SYSTEM.
14. EXTEND EXISTING COMMUNICATION CONDUIT TO NEW LOCATIONS SEE SHEET E1.2 FOR CONTINUATION.

PROFESSIONAL ENGINEER LICENSE NO. 33517 STATE OF IDAHO ZACHARY L. YARBROUGH 2-17-20

COPYRIGHT BERNARDO WILLS ARCHITECTS,PC 2013

COFFMAN ENGINEERS
AECC249
800 F Street
Anchorage, AK 99501
ph: 907.276.6664
www.coffman.com

153 SOUTH JEFFERSON SPOKANE WASHINGTON 99201 509.838.4511 FAX 509.838.4605 WWW.BERNARDOWILLS.COM

BERNARDO | WILLS ARCHITECTS PC

BID SET

ENLARGED ELECTRICAL SITE PLAN

War Memorial Field Enhancements

Ontario Street
Sandpoint, Idaho

Project No: 19-10-207
Drawn by: ACB
Date: 02-18-2020

E1.3

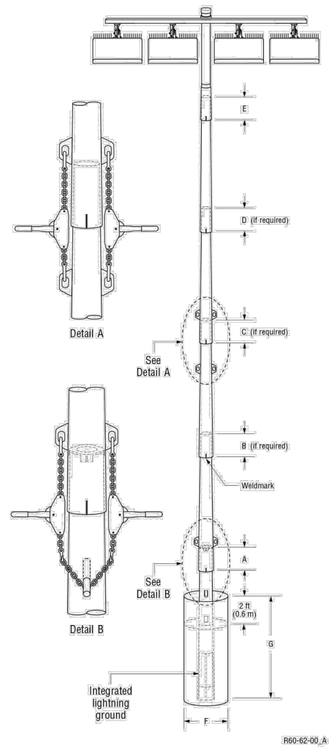

1 FOUNDATION AND POLE ASSEMBLY

SCALE: NOT TO SCALE

TABLE 1: POLE ASSEMBLY			
POLE ID	POLE HEIGHT ft (m)	# OF LUMINAIRES	ASSEMBLED POLE WEIGHT 3 lb (kg)
A1	70 (21.3)	6	1811 (821)
A3	90 (27.4)	9	3734 (1694)
B1	90 (27.4)	9	4261 (1933)

Pole Assembly Notes:

1. Steel pole should overlap concrete base and be seated tight with 1 1/2 ton come-alongs (contractor provided).
2. Align weldmarks on steel sections before assembling.
3. Assembled pole weight includes steel sections, crossarms, luminaires, and electrical components enclosures.
4. Section overlap must be pulled together until tight. Overlap measurement should be +/- 6 in (150 mm).
5. This document is not intended for use as an assembly instruction. See Installation Instructions: Light-Structure SystemTM Lighting System for complete assembly procedure.

TABLE 2: FOUNDATION DETAILS							
POLE ID	CONCRETE BASE WEIGHT lb(kg)	BURIAL INFORMATION 3,4 F in (mm)	G ft (m)	CONCRETE BACKFILL 1,2 yd3 (m3)	CUT BASE	LIGHTNING GROUND 5 TYPE	SUPPLEMENTAL INSTRUCTION
A1	2770 (1256)	30 (762)	12 (3.7)	1.5 (1.1)	NO	INTEGRATED 6	N/A
A3	5280 (2395)	30 (762)	16 (4.9)	1.6 (1.2)	NO	INTEGRATED 6	N/A
B1	7820 (3547)	36 (914)	18 (5.5)	2.8 (2.2)	NO	INTEGRATED 6	N/A

Foundation Notes:

1. Concrete backfill is calculated to 2 ft (0.6m) below grade (no overage included). Top 2 ft (0.6m) to be class 5 soil compacted to 95% density of surrounding undisturbed soil unless otherwise specified in stamped structural design.
2. Concrete backfill required 3000 lb/in2 (20 MPa) minimum.
3. Foundation design per 2015 IBC, 115 mph, exposure category C, variation STD (Risk Category II).
4. Assumes IBC class 5 soils.
5. Standard bases include integrated lightning protection. If bases are cut, supplemental lightning protection is required. Contact Musco for materials and instruction.
6. Lightning protection is a manufacturer installed concrete encased electrode and connector. Ground connection is made when concrete base is installed and footing is poured. No additional steps required.

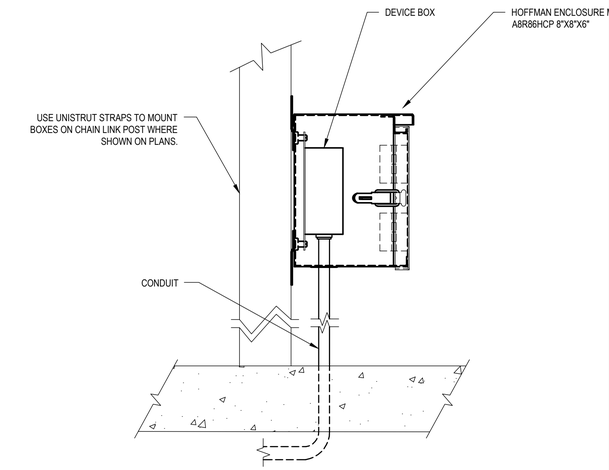

NOTE: ORIENTATE ENCLOSURE TO FACE THE INSIDE OF BATTING CAGE AND BULLPENS. ORIENTATE ENCLOSURE BEHIND BACKSTOPS OUTSIDE OF INFIELD.

2 PEDISTAL MOUNTED RECPETACLE

SCALE: NOT TO SCALE

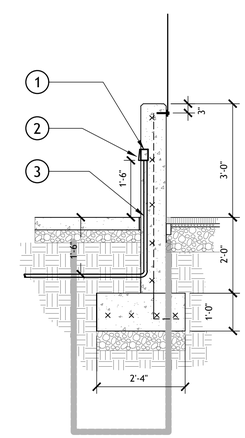

1. ELECTRICAL SINGLE GANG RECEPTACLE BACK BOX RECESSED IN CONCRETE. INSTALL GFCI RATED RECEPTACLE.
2. PROVIDE METAL, LOCKABLE NEMA3R IN-USE COVER.
3. PROVIDE 1" PVC CONDUIT FROM ELECTRICAL PANEL.

3 BACKSTOP WALL MOUNTED RECEPTACLE

SCALE: 1/2"=1'-0"

COPYRIGHT BERNARDO WILLS ARCHITECTS,PC 2013

PROFESSIONAL ENGINEER LICENSED ZACHARY L. YARBROUGH STATE OF IDAHO 03-17-20

COFFMAN ENGINEERS
800 F Street
Anchorage, AK 99501
ph: 907.276.6664
www.coffman.com
AECC249

153 SOUTH JEFFERSON SPOKANE WASHINGTON 99201 509.838.4511 FAX 509.838.4605 WWW.BERNARDOWILLS.COM

BERNARDO | WILLS ARCHITECTS PC
BWA

BID SET

ELECTRICAL DETAILS

War Memorial Field Enhancements

Ontario Street
Sandpoint, Idaho

Project No: 19-10-207
Drawn by: ACB
Date: 02-18-2020

E5.1

EQUIPMENT SCHEDULE

Notes:
A. FURNISHED AND INSTALLED BY DIVISION 23
B. FURNISHED BY DIVISION 23, INSTALLED BY DIVISION 26
C. FURNISHED AND INSTALLED BY DIVISION 26
D. FURNISHED BY OTHERS, INSTALLED BY DIVISION 26
E. FURNISHED AND INSTALLED BY OTHERS
F. NEMA 5-15R RECEPTACLE
G. NEMA 5-20R RECEPTACLE
H. NEMA 6-20R RECEPTACLE
I. NEMA 5-50R RECEPTACLE
J. DIRECT CONNECTION

Key:
FLA - FULL LOAD AMPS
MCA - MINIMUM CIRCUIT AMPS
VFD - VARIABLE FREQUENCY DRIVE
HP- HORSE POWER

UNIT ID		LOCATION	VOLTS	PHASE	HP	LOAD (KVA)	FLA	MCA	MOCP	EMER CKT	BREAKER POLE	BREAKER AMPS	UNIT DISCONNECT POLE	UNIT DISCONNECT AMPS	UNIT DISCONNECT FUSE	UNIT DISCONNECT NOTES	WIRES PHASE NO.	WIRES PHASE SZ	WIRES GND SZ	WIRES CONDUIT SIZE	STARTER COMBO	STARTER FVNR	STARTER SOFT	STARTER VFD	STARTER NOTES	CONNECTION CORD AND PLUG	CONNECTION DIRECT CONNECT	CONNECTION CAPACITR	CONNECTION NOTES	CIRCUIT NUMBER	REMARKS
B1	FIELD LIGHT POLE	SOUTH CENTER	480	3			19.20				3	30				E	3	10	10	1							X			FL:7,9,11	CONTACTOR CONTROL IN MUSCO CABINET
B2	FIELD LIGHT POLE	NORTH CENTER	480	3			19.30				3	30				E	3	8	10	1							X			FL13,15,17	CONTACTOR CONTROL IN MUSCO CABINET
F1	FIELD LIGHT POLE	WEST SIDE	480	3			15.70				3	30				E	3	10	10	1							X			FL:19,21,23	CONTACTOR CONTROL IN MUSCO CABINET
F2	FIELD LIGHT POLE	WEST SIDE	480	3			17.00				3	30				E	3	10	10	1							X			FL:25,27,29	CONTACTOR CONTROL IN MUSCO CABINET
A1	FIELD LIGHT POLE	EAST SIDE	480	3			1.30				3	20				E	3	10	10	1							X			FL:6,8,10	CONTACTOR CONTROL IN MUSCO CABINET
A2	FIELD LIGHT POLE	NORTH EAST	480	3			5.30				3	20				E	3	8	10	1							X			FL:18,20,22	CONTACTOR CONTROL IN MUSCO CABINET
A3	FIELD LIGHT POLE	EAST SIDE	480	3			17.30				3	30				E	3	8	10	1							X			FL:1,3,5	CONTACTOR CONTROL IN MUSCO CABINET
A1	FIELD LIGHT POLE	EAST SIDE	480	3			10.50				3	20				E	3	10	10	1							X			FL:12,14,16	CONTACTOR CONTROL IN MUSCO CABINET

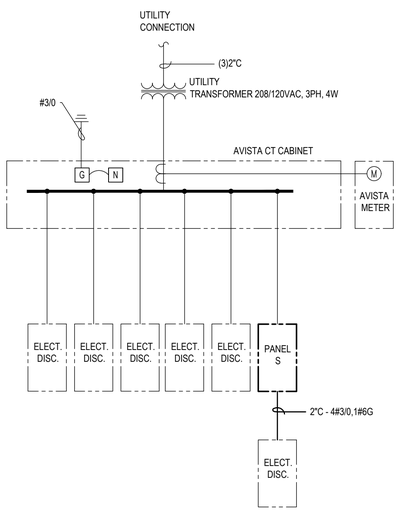

SOUTH SERVICE ONE-LINE
SCALE: NTS

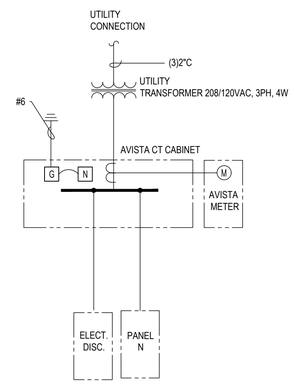

NORTH SERVICE ONE-LINE
SCALE: NTS

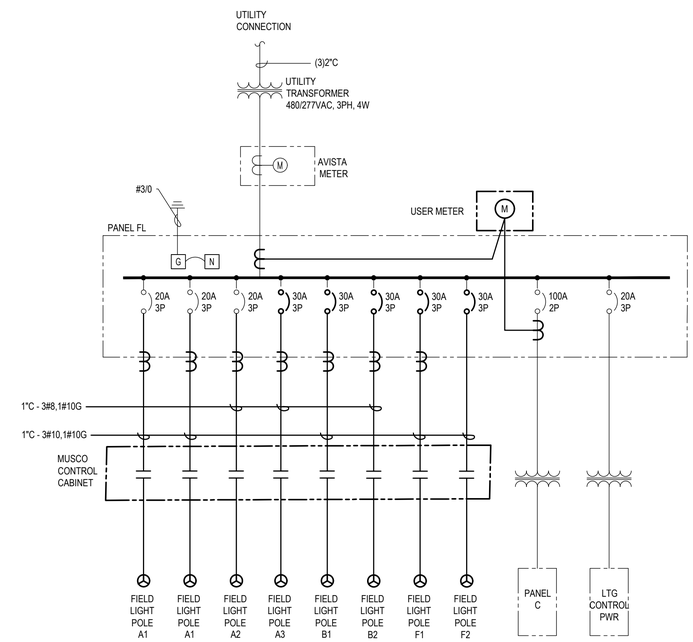

FIELD LIGHTING
SCALE: NTS

ELECTRICAL SCHEDULES AND ONE-LINES
SCALE: NTS

COPYRIGHT BERNARDO WILLS ARCHITECTS,PC 2013

153 SOUTH JEFFERSON SPOKANE WASHINGTON 99201 509.838.4511 FAX 509.838.4605 WWW.BERNARDOWILLS.COM

BERNARDO | WILLS ARCHITECTS PC

COFFMAN ENGINEERS
800 F Street
Anchorage, AK 99501
ph 907.276.6564
www.coffman.com
AECC249

PROFESSIONAL ENGINEER
LICENSED
03-17-20
ZACHARY L. YARBROUGH
STATE OF IDAHO

BID SET

War Memorial Field Enhancements

Ontario Street
Sandpoint, Idaho

Project No: 19-10-207
Drawn by: ACB
Date: 02-18-2020

E6.1

Project — 1-PHASE PANEL SCHEDULE — PANEL: N (e)

Location: | Feed-Thru To: | DATE: 2/17/2020

Ckt	Description	Phase	Amp	Poles	Notes	Ckt Totals
1	GFCI REC.	A	20	1		0.4
3	FLAG POLE/MEMORIAL	B	20	1		0.5
5	**SOFTBALL FIELD RECEPTACLE**	**A**	**20**	**1**	**1**	0.4
7	**SOFTBALL FIELD RECEPTACLE**	**B**	**20**	**1**	**1**	0.4
2	**SOFTBALL FIELD RECEPTACLE**	**A**	**20**	**1**	**1**	0.4
4	**SPARE**	**B**	**20**	**1**	**1**	
6	**SPARE**	**A**	**20**	**1**	**1**	
8	**SPARE**	**B**	**20**	**1**	**1**	

Specifications

Overcurrent Rating (Amps):	200
Voltage (L-L):	240
Phase:	1
Wire:	3
Bus Current Rating (Amps):	200
Bus Material:	Cu
Short Circuit Current Rating (Amps)	
Main Type:	CB
Neutral Type:	100%
Mounting/Encl.:	SURFACE NEMA 3R

2017 NEC Sections Used in Demand Calculations

Factor #	NEC Reference	Notes
1	TBL 220.44 Receptacles ND	1st 10k @100%, Remainder @50%
2	TBL 220.42 Apartments General Lighting	1st 20k@50%, 20-100k @40%, >100k @30%
3	430.24 Motors	Largest @125% Remainder @100%
4	210.91(A)1 Cont Loads	125%
5	Non-Cont Loads	100%
6	220.51 Heating	100%

Feeder Load Breakdown	Conn(KVA)	Dmd Fact
Non-Dwelling Receptacles	1.44	1.00
Dwelling General Illumination	0.00	0.00
Non-Continuous Lighting	0.00	1.00
Continuous Lighting	0.50	1.25
Exterior Lighting	0.00	1.25
Kitchen Appliances	0.00	1.00
Motors	0.00	1.00
Largest Motor (per phase)	0.00	0.25
Fixed Heating	0.00	1.00
Fixed Cooling	0.00	1.00
Non-Diversity Loads	0.00	1.00
Other	0.00	1.00

Connected Feeder Load Summary

	CONN KVA	CONN AMPS	NEC KVA	NEC AMPS
PHASE A:	1.08	9.00	1.08	9.00
PHASE B:	0.86	7.17	0.99	8.21
TOTAL:	1.94	8.08	2.07	8.60

Notes: **1) PROVIDE A NEW 20A/1P CIRCUIT BREAKER.**

Panel Loading: ACCEPTABLE

PROJECT: project name — PANEL: FL

Location: | Feed-Thru to: | Date: 2/17/2020

Ckt	Description	Phase	Amp	Poles	Notes	Ckt Totals
1	MUSCO LIGHTING CONTACTOR	A	30	3	1	4.79
3	- POLE A3	B	-	-		4.79
5	-	C	-	-		4.79
7	**MUSCO LIGHTING CONTACTOR**	**A**	30	3	3	
9	- POLE B1	B	-	-		
11	-	C	-	-		
13	MUSCO LIGHTING CONTACTOR	A	30	3	1	5.35
15	- POLE B2	B	-	-		5.35
17	-	C	-	-		5.35
19	MUSCO LIGHTING CONTACTOR	A	30	3	2	4.35
21	- POLE F1	B	-	-		4.35
23	-	C	-	-		4.35
25	MUSCO LIGHTING CONTACTOR	A	30	3	1	4.71
27	- POLE F2	B	-	-		4.71
29	-	C	-	-		4.71
2	5KVA - TRANSFORMER	A	20	2		
4	- LTG CONTROL POWER	B	-	-		
6	**MUSCO LIGHTING CONTACTOR**	**C**	20	3	3	0.36
8	**- POLE A1**	**A**	-	-		0.36
10	**-**	**B**	-	-		0.36
12	**MUSCO LIGHTING CONTACTOR**	**C**	20	3	3	2.90
14	**- POLE A1**	**A**	-	-		2.90
16	**-**	**B**	-	-		2.90
18	**MUSCO LIGHTING CONTACTOR**	**C**	20	3	3	1.47
20	**- POLE A2**	**A**	-	-		1.47
22	**-**	**B**	-	-		1.47
24	SPACE	C				
26	SPACE	A				
28	50 KVA TRANSFORMER	B	100	2		
30	- CONCESSION BLDG.	C	-	-		

Specifications

Voltage (L-L):	480
Phase/Wire:	3PH / 4W
Bus Current Rating (Amps):	400
Bus Material:	Cu/Al
Short Circuit Current Rating (Amps)	30kA
Main Type:	BRKR
Main Rating:	400
Neutral Type:	FULL
Mounting/Encl.:	SURFACE NEMA1

2017 NEC Sections Used in Demand Calculations

Factor #	NEC Reference	Notes
1	TBL 220.44 Receptacles ND	1st 10k @100%, Remainder @50%
2	TBL 220.42 Apartments General Lighting	1st 20k@50%, 20-100k @40%, >100k @30%
3	430.24 Motors	Largest @125% Remainder @100%
4	210.19(A)1 Cont Loads	125%
5	Non-Cont Loads	100%
6	220.51 Heating	100%

Feeder Load Breakdown	Conn(KVA)	Dmd Fact
Non-Dwelling Receptacles	0.00	0.00
Dwelling General Illumination	0.00	0.00
Non-Continuous Lighting	0.00	1.00
Continuous Lighting	0.00	1.25
Exterior Lighting	87.75	1.25
Kitchen Appliances	0.00	1.00
Motors	0.00	1.00
Largest Motor (per phase)	0.00	0.25
Fixed Heating	0.00	1.00
Fixed Cooling	0.00	1.00
Non-Diversity Loads	0.00	1.00
Other	0.00	1.00

Connected Feeder Load Summary

	CONN KVA	CONN AMPS	NEC KVA	NEC AMPS
PHASE A:	29.25	105.55	36.56	131.94
PHASE B:	29.25	105.55	36.56	131.94
PHASE C:	29.25	105.55	36.56	131.94
TOTAL:	87.75	105.55	109.69	131.94

Notes:
1) REPLACE EXISTING CIRCUIT BREAKER WITH A 30A/3P CIRCUIT BREAKER.
2) PROVIDE A NEW 30A/3P CIRCUIT BREAKER.
3) REUSE EXISTING CIRCUIT BREAKER.

Panel Loading: ACCEPTABLE

PROJECT: — PANEL: S

Location: | Feed-Thru to: 200A FUSED DISCONNECT. | Date: 2/17/2020

Ckt	Description	Phase	Amp	Poles	Notes	Ckt Totals
1	(FUTURE) REC. LIBERTY BELL	A	20	1		
3	(FUTURE) PARKING LTG	B	20	1		
5	REC - BASEBALL FIELD	C	20	1		
7	REC - BASEBALL FIELD	A	20	1		
9	REC - BASEBALL FIELD	B	20	1		
11	REC - BASEBALL FIELD	C	20	1		
13	REC - BASEBALL FIELD	A	20	1		
15	SPARE	B	20	1		
17	SPARE	C	20	1		
19		A				
21		B				
23		C				
25		A				
27		B				
29		C				
31		A				
33		B				
35		C				
37		A				
39		B				
41		C				
2	(FUTURE) RESTROOM BLG.	A	100	3		
4	-	B	-	-		
6	-	C	-	-		
8	SPARE	A	20	1		
10	SPARE	B	20	1		
12	SPARE	C	20	1		
14	SPARE	A	20	1		
16	SPARE	B	20	1		
18	SPARE	C	20	1		
20		A				
22		B				
24		C				
26		A				
28		B				
30		C				
32		A				
34		B				
36		C				
38		A				
40		B				
42		C				

Specifications

Voltage (L-L):	208
Phase/Wire:	3PH / 4W
Bus Current Rating (Amps):	200
Bus Material:	Cu/Al
Short Circuit Current Rating (Amps)	22kA
Main Type:	BRKR
Main Rating:	200
Neutral Type:	FULL
Mounting/Encl.:	SURFACE NEMA 3R

2017 NEC Sections Used in Demand Calculations

Factor #	NEC Reference	Notes
1	TBL 220.44 Receptacles ND	1st 10k @100%, Remainder @50%
2	TBL 220.42 Apartments General Lighting	1st 20k@50%, 20-100k @40%, >100k @30%
3	430.24 Motors	Largest @125% Remainder @100%
4	210.19(A)1 Cont Loads	125%
5	Non-Cont Loads	100%
6	220.51 Heating	100%

Feeder Load Breakdown	Conn(KVA)	Dmd Fact
Non-Dwelling Receptacles	0.00	0.00
Dwelling General Illumination	0.00	0.00
Non-Continuous Lighting	0.00	1.00
Continuous Lighting	0.00	1.25
Exterior Lighting	0.00	1.25
Kitchen Appliances	0.00	1.00
Motors	0.00	1.00
Largest Motor (per phase)	0.00	0.25
Fixed Heating	0.00	1.00
Fixed Cooling	0.00	1.00
Non-Diversity Loads	0.00	1.00
Other	0.00	1.00

Connected Feeder Load Summary

	CONN KVA	CONN AMPS	NEC KVA	NEC AMPS
PHASE A:				
PHASE B:				
PHASE C:				
TOTAL:				

Notes: 1) PROVIDE FEED THRU LUGS TO SERVE EXISTING 200A DISCONNECT

Panel Loading: ACCEPTABLE

COPYRIGHT BERNARDO WILLS ARCHITECTS,PC 2013

PROFESSIONAL ENGINEER LICENSE
STATE OF IDAHO
ZACHARY L. YARBROUGH
03-17-20

COFFMAN ENGINEERS
AECC249
800 F Street
Lewiston, ID 83501
ph 208.746.6564
www.coffman.com

153 SOUTH JEFFERSON SPOKANE WASHINGTON 99201
509.838.4511 FAX 509.838.4605 WWW.BERNARDOWILLS.COM

BERNARDO | WILLS ARCHITECTS PC

BID SET

SCHEDULES

War Memorial Field Enhancements

Ontario Street
Sandpoint, Idaho

Project No: 19-10-207
Drawn by: ACB
Date: 02-18-2020

E6.2

Memorial Field Retrofit

Sandpoint,ID

Lighting System

Pole / Fixture Summary

Pole ID	Pole Height	Mtg Height	Fixture Qty	Luminaire Type	Load	Circuit
A1	70'	70'	5	TLC-LED-1200	5.85 kW	B
		16'	1	TLC-BT-575	0.58 kW	A
A2	70'	70'	3	TLC-LED-1200	3.51 kW	B
A3	90'	90'	7	TLC-LED-1500	10.01 kW	A
		16'	2	TLC-BT-575	1.15 kW	A
B1	90'	90'	8	TLC-LED-1500	11.44 kW	A
		16'	1	TLC-BT-575	0.58 kW	A
B2	90'	90'	7	TLC-LED-1500	10.01 kW	A
		90'	1	TLC-LED-900	0.89 kW	A
		16'	2	TLC-BT-575	1.15 kW	A
F1	80'	80'	7	TLC-LED-1200	8.19 kW	A
		80'	1	TLC-LED-600	0.58 kW	A
		16'	2	TLC-BT-575	1.15 kW	A
F2	80'	80'	8	TLC-LED-1200	9.36 kW	A
		16'	2	TLC-BT-575	1.15 kW	A
7			***57***		***65.59 kW***	

Circuit Summary

Circuit	Description	Load	Fixture Qty
A	Football	56.23 kW	49
B	Baseball	9.36 kW	8

Fixture Type Summary

Type	Source	Wattage	Lumens	L90	L80	L70	Quantity
TLC-LED-1500	LED 5700K - 75 CRI	1430W	160,000	>81,000	>81,000	>81,000	22
TLC-LED-1200	LED 5700K - 75 CRI	1170W	136,000	>81,000	>81,000	>81,000	23
TLC-LED-600	LED 5700K - 75 CRI	580W	65,600	>81,000	>81,000	>81,000	1
TLC-BT-575	LED 5700K - 75 CRI	575W	52,000	>81,000	>81,000	>81,000	10
TLC-LED-900	LED 5700K - 75 CRI	890W	89,600	>81,000	>81,000	>81,000	1

Light Level Summary

Calculation Grid Summary

Grid Name	Calculation Metric	Illumination					Circuits	Fixture Qty
		Ave	Min	Max	Max/Min	Ave/Min		
Baseball (Infield)	Horizontal Illuminance	51.5	37.3	63.3	1.70	1.38	A,B	57
Baseball (Outfield)	Horizontal Illuminance	42.3	24.1	56.8	2.36	1.76	A,B	57
Football	Horizontal Illuminance	39	28	52	1.86	1.39	A	49

From Hometown to Professional

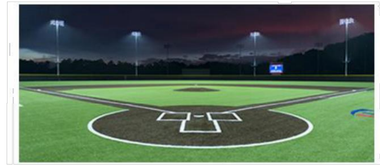

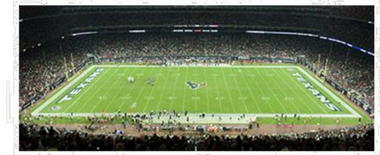

ENGINEERED DESIGN By: Zach Morris • File #203056C • 08-Jan-20

We Make It Happen.

Not to be reproduced in whole or part without the written consent of Musco Sports Lighting, LLC. ©1981, 2020 Musco Sports Lighting, LLC.

PROJECT SUMMARY

COPYRIGHT BERNARDO WILLS ARCHITECTS,PC 2013

PROFESSIONAL ENGINEER LICENSE 15353 STATE OF IDAHO ZACHARY L. YARBROUGH 1-17-20

COFFMAN ENGINEERS
AECC249
800 F Street
Anchorage, AK 99501
ph: 907.276.6664
www.coffman.com

153 SOUTH JEFFERSON SPOKANE WASHINGTON 99201 509.838.4511 FAX 509.838.4605 WWW.BERNARDOWILLS.COM

BID SET

REFERENCE ONLY

War Memorial Field Enhancements

Ontario Street
Sandpoint, Idaho

BWA BERNARDO | WILLS ARCHITECTS PC

Project No: 19-10-207
Drawn by: ACB
Date: 02-18-2020

E8.1

EQUIPMENT LIST FOR AREAS SHOWN

Pole				Luminaires				
QTY	LOCATION	SIZE	GRADE ELEVATION	MOUNTING HEIGHT	LUMINAIRE TYPE	QTY / POLE	THIS GRID	OTHER GRIDS
1	A1	70'	-	15.5'	TLC-BT-575	1	1	0
				70'	TLC-LED-1200	5	5	0
1	A2	70'	-	70'	TLC-LED-1200	3	3	0
1	A3	90'	-	15.5'	TLC-BT-575	2	2	0
				90'	TLC-LED-1500	7	7	0
1	B1	90'	-	15.5'	TLC-BT-575	1	1	0
				90'	TLC-LED-1500	8	8	0
1	B2	90'	-	90'	TLC-LED-900	1	1	0
				15.5'	TLC-BT-575	2	2	0
				90'	TLC-LED-1500	7	7	0
1	F1	80'	-	80'	TLC-LED-600	1	1	0
				15.5'	TLC-BT-575	2	2	0
				80'	TLC-LED-1200	7	7	0
1	F2	80'	-	15.5'	TLC-BT-575	2	2	0
				80'	TLC-LED-1200	8	8	0
7	TOTALS					57	57	0

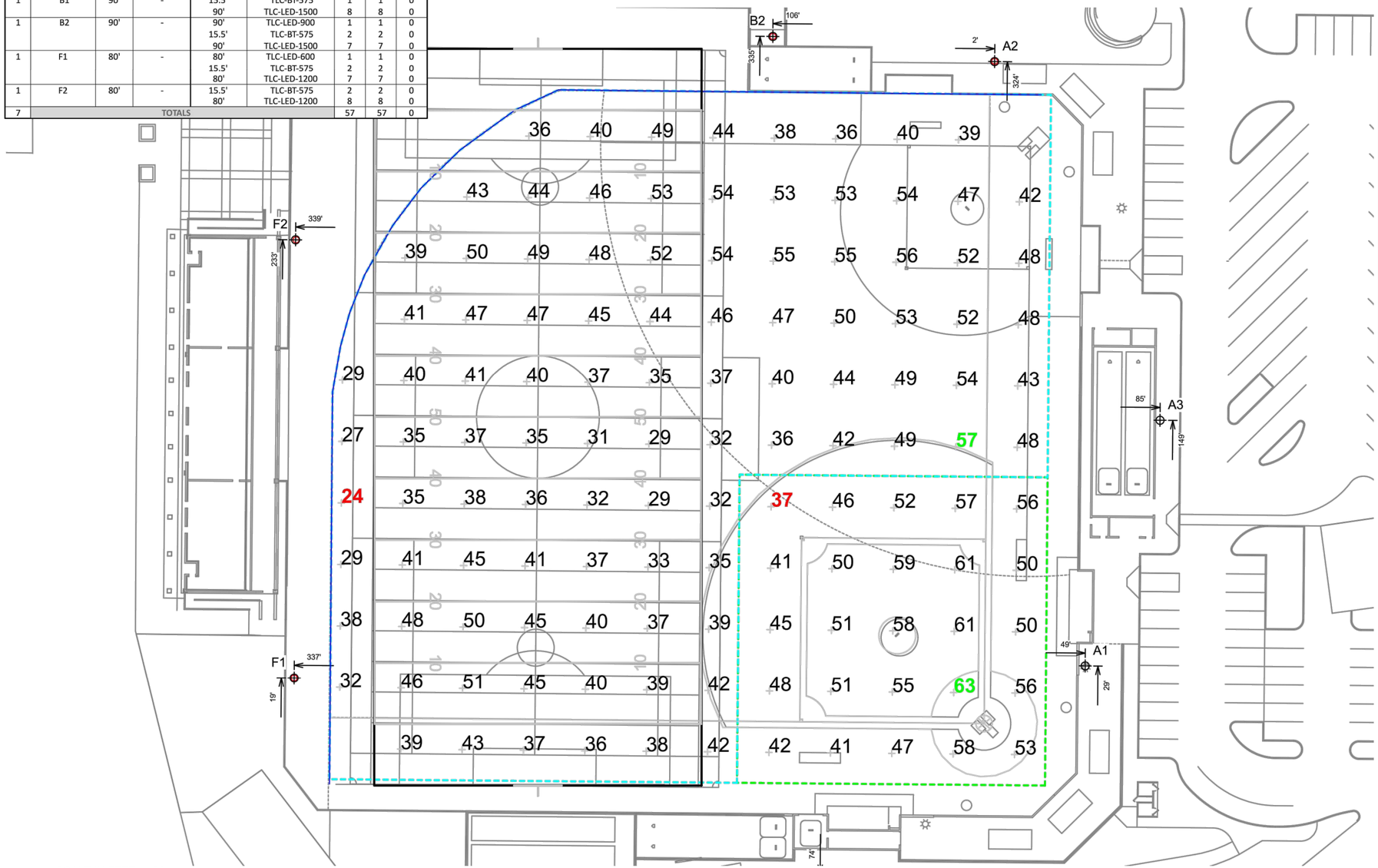

Pole location(s) ⊕ dimensions are relative to 0,0 reference point(s) ⊗

ENGINEERED DESIGN By: Zach Morris • File #203056C • 08-Jan-20

Memorial Field Retrofit

Sandpoint,ID

GRID SUMMARY

Name:	**Baseball**
Size:	Irregular 320' / 379' / 307'
Spacing:	30.0' x 30.0'
Height:	3.0' above grade

ILLUMINATION SUMMARY

MAINTAINED HORIZONTAL FOOTCANDLES

	Infield	Outfield
Guaranteed Average:	**50**	**30**
Scan Average:	51.5	42.3
Maximum:	63.3	56.8
Minimum:	37.3	24.1
Avg / Min:	1.38	1.76
Guaranteed Max / Min:	**2**	**2.5**
Max / Min:	1.70	2.36
UG (adjacent pts):	1.25	1.47
CU:	0.69	
No. of Points:	25	98

LUMINAIRE INFORMATION

Color / CRI:	5700K - 75 CRI
Luminaire Output:	160,000 / 136,000 / 65,600 / 52,000 / 89,600 lumer
No. of Luminaires:	**57**
Total Load:	65.59 kW

Lumen Maintenance

Luminaire Type	L90 hrs	L80 hrs	L70 hrs
TLC-LED-1500	>81,000	>81,000	>81,000
TLC-LED-1200	>81,000	>81,000	>81,000
TLC-LED-600	>81,000	>81,000	>81,000
TLC-BT-575	>81,000	>81,000	>81,000
TLC-LED-900	>81,000	>81,000	>81,000

Reported per TM-21-11. See luminaire datasheet for details.

Guaranteed Performance: The ILLUMINATION described above is guaranteed per your Musco Warranty document and includes a 0.95 dirt depreciation factor.

Field Measurements: Individual field measurements may vary from computer-calculated predictions and should be taken in accordance with IESNA RP-6-15.

Electrical System Requirements: Refer to Amperage Draw Chart and/or the **"Musco Control System Summary"** for electrical sizing.

Installation Requirements: Results assume ± 3% nominal voltage at line side of the driver and structures located within 3 feet (1m) of design locations.

musco Lighting

We Make It Happen.

Not to be reproduced in whole or part without the written consent of Musco Sports Lighting, LLC. ©1981, 2020 Musco Sports Lighting, LLC.

ILLUMINATION SUMMARY

COPYRIGHT BERNARDO WILLS ARCHITECTS,PC 2013

PROFESSIONAL ENGINEER LICENSE 15353 STATE OF IDAHO ZACHARY L. YARBROUGH 1-17-20

COFFMAN ENGINEERS AECC249
800 F Street
Anchorage, AK 99501
ph 907.276.6664
www.coffman.com

153 SOUTH JEFFERSON SPOKANE WASHINGTON 99201 509.838.4511 FAX 509.838.4605 WWW.BERNARDOWILLS.COM

BERNARDO | WILLS ARCHITECTS PC

BID SET

REFERENCE ONLY

War Memorial Field Enhancements

Ontario Street
Sandpoint, Idaho

Project No: 19-10-207
Drawn by: ACB
Date: 02-18-2020

E8.2

EQUIPMENT LIST FOR AREAS SHOWN

Pole				Luminaires				
QTY	LOCATION	SIZE	GRADE ELEVATION	MOUNTING HEIGHT	LUMINAIRE TYPE	QTY / POLE	THIS GRID	OTHER GRIDS
1	A1	70'	-	15.5'	TLC-BT-575	1	1	0
				70'	TLC-LED-1200	5	0	5
1	A3	90'	-	15.5'	TLC-BT-575	2	2	0
				90'	TLC-LED-1500	7	7	0
1	B1	90'	-	15.5'	TLC-BT-575	1	1	0
				90'	TLC-LED-1500	8	8	0
1	B2	90'	-	90'	TLC-LED-900	1	1	0
				15.5'	TLC-BT-575	2	2	0
				90'	TLC-LED-1500	7	7	0
1	F1	80'	-	80'	TLC-LED-600	1	1	0
				15.5'	TLC-BT-575	2	2	0
				80'	TLC-LED-1200	7	7	0
1	F2	80'	-	15.5'	TLC-BT-575	2	2	0
				80'	TLC-LED-1200	8	8	0
6	TOTALS					54	49	5

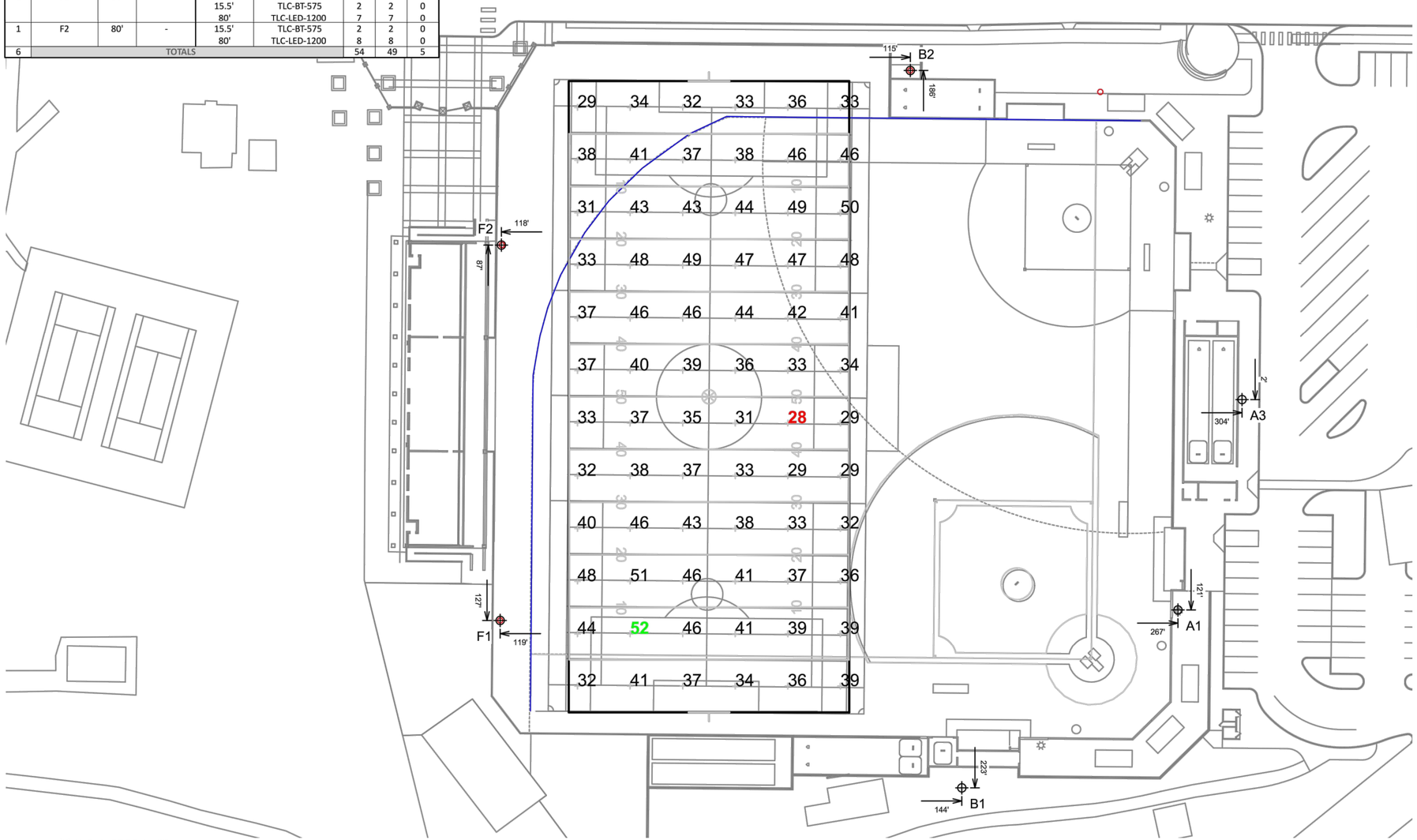

Pole location(s) ⊕ dimensions are relative to 0,0 reference point(s) ⊗

ENGINEERED DESIGN By: Zach Morris • File #203056C • 08-Jan-20

Memorial Field Retrofit

Sandpoint,ID

GRID SUMMARY

Name:	**Football**
Size:	360' x 160'
Spacing:	30.0' x 30.0'
Height:	3.0' above grade

ILLUMINATION SUMMARY

MAINTAINED HORIZONTAL FOOTCANDLES

	Entire Grid
Guaranteed Average:	**30**
Scan Average:	39.0
Maximum:	52.0
Minimum:	28.0
Avg / Min:	1.40
Guaranteed Max / Min:	**2.5**
Max / Min:	1.86
UG (adjacent pts):	1.45
CU:	0.42
No. of Points:	72

LUMINAIRE INFORMATION

Color / CRI:	5700K - 75 CRI
Luminaire Output:	160,000 / 136,000 / 65,600 / 52,000 / 89,600 lumen
No. of Luminaires:	**49**
Total Load:	56.23 kW

Lumen Maintenance

Luminaire Type	L90 hrs	L80 hrs	L70 hrs
TLC-LED-1500	>81,000	>81,000	>81,000
TLC-LED-1200	>81,000	>81,000	>81,000
TLC-LED-600	>81,000	>81,000	>81,000
TLC-BT-575	>81,000	>81,000	>81,000
TLC-LED-900	>81,000	>81,000	>81,000

Reported per TM-21-11. See luminaire datasheet for details.

Guaranteed Performance: The ILLUMINATION described above is guaranteed per your Musco Warranty document and includes a 0.95 dirt depreciation factor.

Field Measurements: Individual field measurements may vary from computer-calculated predictions and should be taken in accordance with IESNA RP-6-15.

Electrical System Requirements: Refer to Amperage Draw Chart and/or the **"Musco Control System Summary"** for electrical sizing.

Installation Requirements: Results assume ± 3% nominal voltage at line side of the driver and structures located within 3 feet (1m) of design locations.

We Make It Happen.

Not to be reproduced in whole or part without the written consent of Musco Sports Lighting, LLC. ©1981, 2020 Musco Sports Lighting, LLC.

ILLUMINATION SUMMARY

COPYRIGHT BERNARDO WILLS ARCHITECTS,PC 2013

PROFESSIONAL ENGINEER LICENSE 17883 STATE OF IDAHO ZACHARY L. YARBROUGH 1-17-20

COFFMAN ENGINEERS AECC249
800 F Street
Anchorage, AK 99501
ph: 907.276.6664
www.coffman.com

153 SOUTH JEFFERSON SPOKANE WASHINGTON 99201 509.838.4511 FAX 509.838.4605 WWW.BERNARDOWILLS.COM

BERNARDO | WILLS ARCHITECTS PC

BID SET

REFERENCE ONLY

War Memorial Field Enhancements

Ontario Street
Sandpoint, Idaho

Project No: 19-10-207
Drawn by: ACB
Date: 02-18-2020

E8.3

NOTES: Pole A3 will be a NEW Musco LSS pole and the rest will be retrofitted

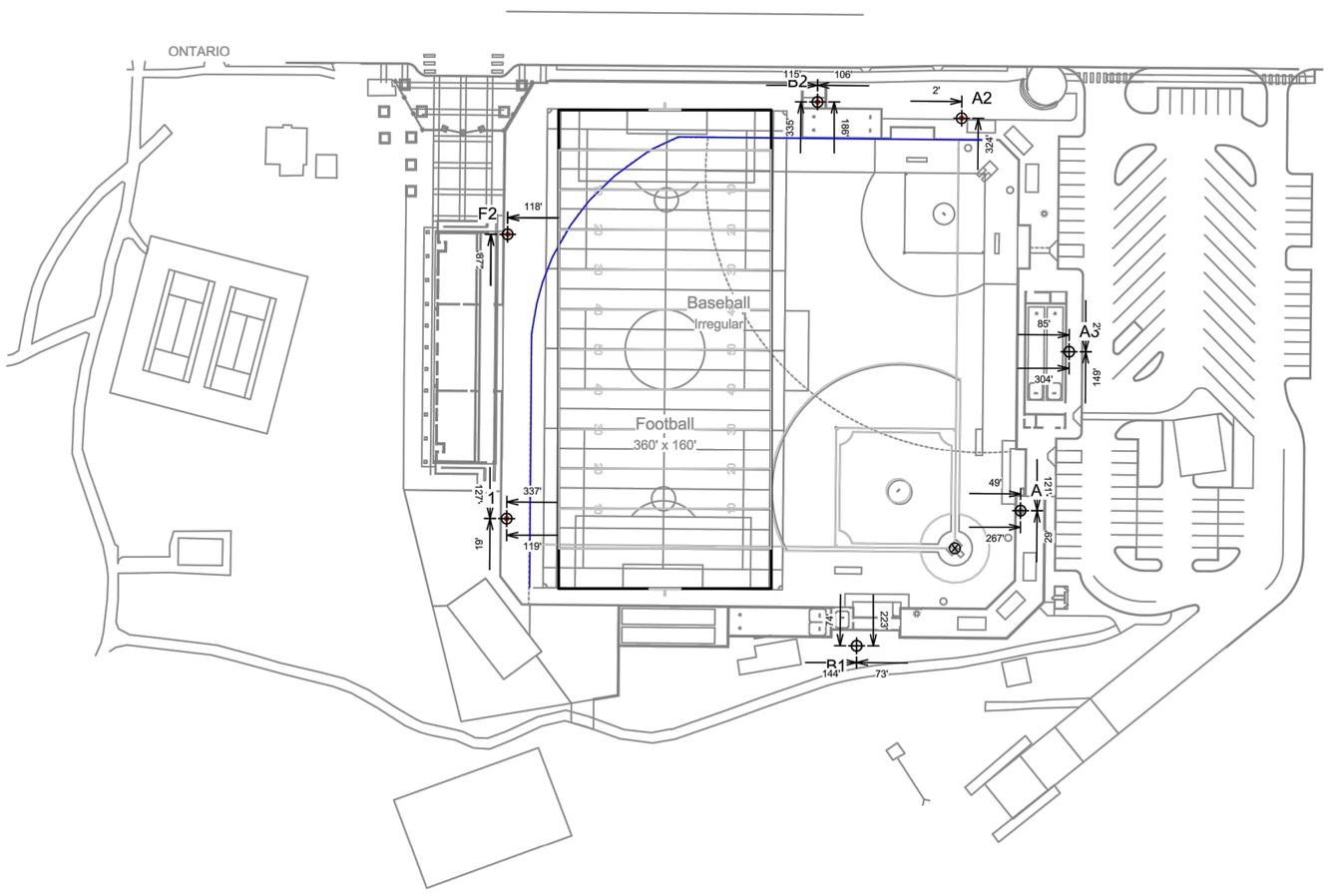

Memorial Field Retrofit

Sandpoint,ID

EQUIPMENT LAYOUT

INCLUDES:
- Baseball
- Football

Electrical System Requirements: Refer to Amperage Draw Chart and/or the **"Musco Control System Summary"** for electrical sizing.

Installation Requirements: Results assume ± 3% nominal voltage at line side of the driver and structures located within 3 feet (1m) of design locations.

EQUIPMENT LIST FOR AREAS SHOWN

Pole				Luminaires		
QTY	LOCATION	SIZE	GRADE ELEVATION	MOUNTING HEIGHT	LUMINAIRE TYPE	QTY / POLE
1	A1	70'	-	15.5' 70'	TLC-BT-575 TLC-LED-1200	1 5
1	A2	70'	-	70'	TLC-LED-1200	3
1	A3	90'	-	15.5' 90'	TLC-BT-575 TLC-LED-1500	2 7
1	B1	90'	-	15.5' 90'	TLC-BT-575 TLC-LED-1500	1 8
1	B2	90'	-	90' 15.5' 90'	TLC-LED-900 TLC-BT-575 TLC-LED-1500	1 2 7
1	F1	80'	-	80' 15.5' 80'	TLC-LED-600 TLC-BT-575 TLC-LED-1200	1 2 7
1	F2	80'	-	15.5' 80'	TLC-BT-575 TLC-LED-1200	2 8
7	TOTALS					57

SINGLE LUMINAIRE AMPERAGE DRAW CHART

Ballast Specifications (.90 min power factor)	Line Amperage Per Luminaire (max draw)						
Single Phase Voltage	208 (60)	220 (60)	240 (60)	277 (60)	347 (60)	380 (60)	480 (60)
TLC-LED-1500	8.5	8.1	7.4	6.4	5.1	4.7	3.7
TLC-LED-1200	7.0	6.6	6.1	5.2	4.2	4.0	3.0
TLC-LED-600	3.4	3.2	3.0	2.6	2.0	1.9	1.5
TLC-BT-575	3.4	3.2	2.9	2.5	2.0	1.8	1.5
TLC-LED-900	5.3	5.0	4.6	4.0	3.2	2.9	2.3

SCALE IN FEET 1 : 100

0' 100' 200'

ENGINEERED DESIGN By: Zach Morris • File #203056C • 08-Jan-20

Pole location(s) ⊕ dimensions are relative to 0,0 reference point(s) ⊗

We Make It Happen.

Not to be reproduced in whole or part without the written consent of Musco Sports Lighting, LLC. ©1981, 2020 Musco Sports Lighting, LLC.

EQUIPMENT LAYOUT

COPYRIGHT BERNARDO WILLS ARCHITECTS,PC 2013

PROFESSIONAL ENGINEER LICENSE 17920 STATE OF IDAHO ZACHARY L. YARBROUGH 03-17-20

COFFMAN ENGINEERS AECC249
800 F Street
Anchorage, AK 99501
ph: 907.276.6664
www.coffman.com

BID SET

REFERENCE ONLY

153 SOUTH JEFFERSON SPOKANE WASHINGTON 99201 509.838.4511 FAX 509.838.4605 WWW.BERNARDOWILLS.COM
BERNARDO | WILLS ARCHITECTS PC
BWA

War Memorial Field Enhancements

Ontario Street
Sandpoint, Idaho

Project No: 19-10-207
Drawn by: ACB
Date: 02-18-2020

E8.4

GENERAL NOTES – 19-11-082,MEMORIAL FIELD

I. GENERAL REQUIREMENTS
1. THE CONTRACTOR SHALL VERIFY ALL DIMENSIONS AND JOB SITE CONDITIONS BEFORE COMMENCING WORK AND SHALL REPORT ANY DISCREPANCIES TO ECLIPSE ENGINEERING, HENCEFORTH REFERRED TO AS THE ENGINEER
2. USE WRITTEN DIMENSIONS. DO NOT USE SCALED DIMENSIONS. WHERE NO DIMENSION IS PROVIDED, CONSULT THE ARCHITECT OR ENGINEER FOR CLARIFICATION BEFORE PROCEEDING WITH THE WORK.
3. THE CONTRACTOR SHALL FIELD VERIFY THE DIMENSIONS AND LAYOUT OF THE EXISTING CONSTRUCTION AS REQUIRED TO COORDINATE THE ERECTION OF THE WORK SPECIFIED IN THESE DRAWINGS. EXISTING BUILDING ELEMENTS ARE IDENTIFIED FOR REFERENCE WITH THE PREFIX (E).
4. DETAILS IN THE DRAWINGS PREFACED WITH THE TITLE "TYPICAL" MAY NOT NECESSARILY BE REFERENCED ON THE PLANS, BUT SHALL STILL APPLY AS SHOWN OR DESCRIBED IN THE DETAILS. WHERE NO DETAIL IS REFERENCED, IT SHALL BE THE CONTRACTOR'S RESPONSIBILITY TO CHOOSE THE RELEVANT TYPICAL DETAIL FROM THOSE PROVIDED.
5. THE DESIGN, ADEQUACY AND SAFETY OF ERECTION BRACING, SHORING, TEMPORARY SUPPORTS, SHORING OF EXISTING BUILDING ELEMENTS, ETC. IS THE SOLE RESPONSIBILITY OF THE CONTRACTOR. THE CONTRACTOR IS RESPONSIBLE FOR THE STABILITY OF THE STRUCTURE PRIOR TO THE ERECTION OF THE FRAMING AND OF THE LATERAL-LOAD-RESISTING SYSTEM IS COMPLETE.
6. THE ENGINEER HOLDS NO LIABILITY FOR UNAUTHORIZED CHANGES TO THE CONSTRUCTION DOCUMENTS MADE BY THE OWNER, CONTRACTOR, BUILDING OFFICIAL, OR OTHER INVOLVED PARTY.
7. THE CONTRACTOR SHALL BE SOLELY RESPONSIBLE FOR PROVIDING A SAFE PLACE TO WORK AND FOR MEETING THE REQUIREMENTS OF ALL APPLICABLE JURISDICTIONS, INCLUDING OSHA. THE CONTRACTOR SHALL EXECUTE THEIR WORK TO ENSURE THE SAFETY OF PERSONS AND ADJACENT PROPERTY AGAINST DAMAGE BY FALLING DEBRIS AND OTHER HAZARDS ASSOCIATED WITH THE WORK.
8. DESIGN CRITERIA
   A. BUILDING CODE: 2015 INTERNATIONAL BUILDING CODE WITH STATE AND LOCAL AMENDMENTS AND ORDINANCES.
   B. GEOTECHNICAL AND GRAVITY DESIGN DATA
      i. ALLOWABLE SOIL BEARING CAPACITY: 2000 PSF FOR GRAVITY LOADS
      ii. ROOF LIVE LOAD: 20 PSF
      iii. GROUND SNOW LOAD, Pg: 56 PSF
      iv. FLAT-ROOF SNOW LOAD, Pf: 55 PSF
      v. SNOW EXPOSURE FACTOR, Ce: 1.0
      vi. SNOW LOAD IMPORTANCE FACTOR, I: 1.0
      vii. THERMAL FACTOR, Ct: 1.2
   C. WIND DESIGN DATA
      i. BASIC WIND SPEED: Vult = 115 MPH, Vasd = 90 MPH
      ii. RISK CATEGORY: II
      iii. WIND EXPOSURE CATEGORY: C
      iv. INTERNAL PRESSURE COEFFICIENT, Gcpi: +/- 0.18
      v. TOPOGRAPHIC FACTOR: Kzt: 1.0
   D. SEISMIC DESIGN DATA
      i. RISK CATEGORY: II
      ii. SEISMIC IMPORTANCE FACTOR, Ie: 1.0
      iii. MAPPED SPECTRAL ACCELERATION, Ss: 0.343
      iv. MAPPED SPECTRAL ACCELERATION, S1: 0.113
      v. SITE CLASS: D
      vi. DESIGN SPECTRAL ACCELERATION, Sds: 0.349
      vii. DESIGN SPECTRAL ACCELERATION, Sd1: 0.176
      viii. SEISMIC DESIGN CATEGORY: C
      ix. BASIC SEISMIC FORCE RESISTING SYSTEM: STEEL ORDINARY CANTILEVERED COLUMNS

II. SHALLOW FOUNDATIONS
1. FOUNDATION EXCAVATION AND CONSTRUCTION SHALL BE PER GEOTECHNICAL REPORT PREPARED BY ALLWEST, INC. DATED 01/17/2020

III. COLD WEATHER CONSTRUCTION
1. CONCRETE:
   A. THE CONTRACTOR SHALL PRACTICE STANDARD COLD-WEATHER CONCRETE METHODS AS PER ACI 306.
   B. CALCIUM CHLORIDE SHALL NOT BE USED AS AN ACCELERATING ADMIXTURE.
   C. CONCRETE DELIVERED TO THE SITE SHALL MEET THE TEMPERATURE REQUIREMENTS OF ASTM C94.
   D. CONCRETE SHALL NOT BE PLACED UPON FROZEN SOILS OR SOILS WHICH CONTAIN FROZEN MATERIAL.
   E. CONCRETE SHALL BE PROTECTED FROM FREEZING UNTIL THE SPECIFIED STRENGTH IS ATTAINED.
2. SOILS:
   A. ALL SNOW AND ICE SHALL BE REMOVED FROM CUT AND FILL AREAS PRIOR TO ANY SITE WORK.
   B. NO FOUNDATIONS OR FILL MATERIAL SHALL BE PLACED UPON SOILS, WHICH ARE FROZEN OR CONTAIN FROZEN MATERIAL.
   C. FILL THAT HAS BEEN PLACED AND COMPACTED IN AN UNFROZEN STATE, WHICH SUBSEQUENTLY BECOMES FROZEN, SHALL BE RE-COMPACTED AT THE SURFACE (AFTER THAWING), BEFORE PLACING ADDITIONAL LIFTS.
   D. EXPOSED NATIVE SUBGRADE THAT BECOMES FROZEN SHALL BE THAWED AND COMPACTED IN PLACE PRIOR TO FOOTING PLACEMENT.
   E. NO FROZEN SOILS SHOULD BE USED AS FILL.
   F. FOLLOWING PLACEMENT OF FOUNDATIONS, AND BEFORE PLACEMENT OF FILL THAT WILL PROVIDE FROST PROTECTION, FROST SHALL NOT BE PERMITTED TO PENETRATE BELOW FOUNDATIONS.

IV. CAST-IN-PLACE CONCRETE
1. CONCRETE:
   A. CONSTRUCTION SHALL BE IN ACCORDANCE WITH ACI 301, UNLESS OTHERWISE NOTED.
   B. REQUIRED COMPRESSIVE STRENGTH, f'c:
      i. CONCRETE ELEMENTS EXPOSED TO THE EXTERIOR GROUND AND WEATHER OR UNCONDITIONED SPACE OF THE BUILDING: 4500 PSI AT 28 DAYS, NORMAL WEIGHT. MAXIMUM WATER TO CEMENT RATIO = 0.45.
      ii. IF THE CONTRACTOR ELECTS TO REPLACE THE CEMENT IN THE CONCRETE MIX WITH HIGH-VOLUME FLY ASH, IT IS PERMISSIBLE TO ESTABLISH f'c AT 56 DAYS. THE CONTRACTOR SHALL COORDINATE THE DURATION OF SHORING AND TEMPORARY BRACING ACCORDINGLY.
      iii. STRUCTURAL DESIGN IS BASED ON A CONCRETE STRENGTH OF f'c = 2,500 PSI, NO CONCRETE STRENGTH TESTING REQUIRED.
   C. DURABILITY REQUIREMENTS:
      i. CONCRETE ELEMENTS EXPOSED TO THE EXTERIOR GROUND AND WEATHER OR UNCONDITIONED SPACE OF THE BUILDING: PROVIDE TOTAL AIR CONTENT IN ACCORDANCE WITH EXPOSURE CLASS F2 IN ACCORDANCE WITH ACI 318, CHAPTER 19, PER THE FOLLOWING TABLE. TOLERANCE ON AIR CONTENT AS DELIVERED SHALL BE +/- 1.5 %:

NOMINAL MAXIMUM AGGREGATE SIZE	*TOTAL AIR CONTENT* EXPOSURE CLASS F2
1/2"	7 %
3/4"	6%
1"	6%
1 1/2"	5.5%

      ii. ALL OTHER CONCRETE: NO REQUIREMENTS.
   D. THE CONTRACTOR SHALL SUBMIT PROPOSED LOCATIONS OF CONSTRUCTION OR POUR JOINTS TO THE ARCHITECT AND ENGINEER FOR REVIEW.
   E. ROUGHEN CONCRETE SURFACES OF CONSTRUCTION JOINTS AND AT LOCATIONS WHERE CONCRETE IS CAST AGAINST EXISTING CONCRETE TO 1/4" AMPLITUDE AND CLEAN OF LAITANCE, FOREIGN MATTER, AND LOOSE PARTICLES.
2. REINFORCING STEEL:
   A. TYPICAL REINFORCING: ASTM A615 GRADE 40 FOR #3 BARS, ASTM A615 GRADE 60 FOR #4 BARS TO #7 BARS, AND ASTM A706 GRADE 60 FOR #8 BARS AND LARGER
   B. REINFORCING TO BE WELDED: ASTM A706 GRADE 60
   C. DEFORMED BAR ANCHORS: ASTM A496, Fy = 70 KSI.
   D. PROVIDE CLEARANCE AND COVER OF REBAR AS FOLLOWS, UNLESS OTHERWISE NOTED:
      i. CAST AGAINST AND PERMANENTLY EXPOSED TO EARTH: 3 INCHES
      ii. FORMED SURFACES EXPOSED TO EARTH OR WEATHER, # 5 BARS AND SMALLER: 1 1/2 INCHES
      iii. FORMED SURFACES EXPOSED TO EARTH OR WEATHER, #6 BARS AND LARGER: 2 INCHES
      iv. INTERIOR SLABS, WALLS, AND JOISTS: 3/4 INCHES
      v. BEAMS AND COLUMNS: 1 1/2 INCHES TO TRANSVERSE REINFORCING
   E. UNLESS OTHERWISE NOTED, REINFORCING BARS SHALL BE SPLICED WITH 50-BAR-DIAMETER LAPS, MINIMUM.
   F. REINFORCING SHALL BE SUPPORTED PRIOR TO CONCRETING IN ACCORDANCE WITH THE CRSI MANUAL OF STANDARD PRACTICE, MSP-1.
   G. REINFORCING SHALL BE DETAILED IN ACCORDANCE WITH ACI 315.
   H. WELDING OF REINFORCING IS PERMITTED ONLY WHERE SHOWN IN THE DRAWINGS. WELDING SHALL CONFORM TO AWS D1.4, STRUCTURAL WELDING CODE – STEEL.
3. SLAB ON GRADE CONTROL JOINTS:
   A. THE CONTRACTOR SHALL INSTALL TOOLED OR SAWCUT CONTROL JOINTS IN THE CONCRETE SLABS ON GRADE. THE JOINTS SHALL BE 1/8" WIDE AND t/4 DEEP, WHERE t EQUALS THE SLAB THICKNESS.
   B. THE JOINTS SHALL SUB-DIVIDE THE SLAB INTO PANELS WITH THE LONGER SIDE NO GREATER THAN 1.5 TIMES THE LENGTH OF THE SHORTER SIDE.
   C. JOINTS IN INTERIOR SLABS SHALL BE SPACED AT NO FURTHER THAN 12'-0" APART AND JOINTS IN EXTERIOR SLABS SHALL BE SPACED AT NO FURTHER THAN 6'-0".
   D. THE CONTRACTOR SHALL SUBMIT THEIR CONTROL JOINT PLAN TO THE ARCHITECT AND ENGINEER FOR REVIEW PRIOR TO THE FIRST SLAB ON GRADE CONCRETE POUR.
4. WELDED WIRE REINFORCEMENT: ASTM A1064, SHEETS ONLY
5. FIBER-REINFORCED CONCRETE: ASTM C1116 TYPE III 4.1.3, 100% HOMOPOLYMER POLYPROPYLENE MD FIBRILLATED FIBERS, 1.5 POUND PER CUBIC YARD, MINIMUM APPLICATION RATE

V. POST-INSTALLED ANCHORS
1. ADHESIVE ANCHORS AND DOWELS IN CONCRETE: SET-XP (ICC-ES ESR-2508) OR AT-XP (IAPMO UES ER-263) BY SIMPSON STRONG-TIE OR HIT-HY 200 (ICC-ES ESR-3187) BY HILTI.
2. EXPANSION ANCHORS IN CONCRETE: STRONG-BOLT 2 (ICC-ES ESR-3037) BY SIMPSON STRONG-TIE OR KWIK BOLT TZ (ICC-ES ESR-1917) BY HILTI.
3. SCREW ANCHORS IN CONCRETE: TITEN HD (ICC-ES ESR-2713) BY SIMPSON STRONG-TIE OR KWIK HUS-EZ (ICC-ES ESR-3027) BY HILTI.
4. FOLLOW MANUFACTURER'S INSTALLATION INSTRUCTIONS FOR ALL POST-INSTALLED ANCHORS, INCLUDING REQUIREMENTS FOR INSTALLING ANCHORS NEAR HEAD OR BED JOINTS IN MASONRY WALLS.
5. PROVIDE STAINLESS STEEL FASTENERS FOR EXTERIOR USE OR WHEN EXPOSED TO WEATHER. PROVIDE ELECTRO-PLATED CARBON STEEL ANCHORS AT OTHER LOCATIONS, UNLESS NOTED OTHERWISE.
6. IF REINFORCEMENT IS ENCOUNTERED DURING DRILLING, ABANDON AND SHIFT THE HOLE LOCATION TO AVOID THE REINFORCEMENT. PROVIDE A MINIMUM OF (2) ANCHOR DIAMETERS OR 1 INCH, WHICHEVER IS LARGER, OF SOUND CONCRETE OR MASONRY BETWEEN THE ANCHOR AND THE ABANDONED HOLE. FILL THE ABANDONED HOLE WITH NON-SHRINK GROUT. IF THE ANCHOR OR DOWEL MAY NOT BE SHIFTED AS NOTED ABOVE, SEEK GUIDANCE FROM THE ENGINEER.
7. LOCATE REINFORCEMENT AND CONFIRM FINAL ANCHOR LOCATIONS PRIOR TO FABRICATING PLATES, MEMBERS, OR OTHER STEEL ASSEMBLIES ATTACHED WITH POST-INSTALLED ANCHORS.
8. SUBSTITUTIONS: SUBSTITUTE PRODUCTS SHALL HAVE AN ASSOCIATED ICC-ES OR IAPMO EVALUATION REPORT AND THE CONTRACTOR MUST DEMONSTRATE PERFORMANCE IS EQUIVALENT TO THE SPECIFIED PRODUCTS. SUBSTITUTIONS WILL NOT BE CONSIDERED UNLESS THIS INFORMATION IS SUBMITTED.

VI. HELICAL PIERS
1. HELICAL PIERS SHALL BE MANUFACTURED BY THE A.B. CHANCE CO., CENTRALIA, MO. OR APPROVED EQUAL.
2. PIERS SHALL BE INSTALLED BY AN AUTHORIZED A.B. CHANCE INSTALLING CONTRACTOR WHO HAS SATISFIED THE CERTIFICATION REQUIREMENTS RELATING TO THE TECHNICAL ASPECTS OF THE PRODUCT AND THE ASCRIBED INSTALLATION TECHNIQUES. PROOF OF CURRENT CERTIFICATION BY THE A.B. CHANCE CO. MUST BE PROVIDED.
3. ALL WORKS AS DESCRIBED HEREIN SHALL BE PERFORMED IN ACCORDANCE WITH ALL APPLICABLE SAFETY CODES IN EFFECT AT THE TIME OF INSTALLATION.
4. HELICAL PIERS SHALL HAVE ICC –ES EVALUATION REPORT # ESR-2794.
5. THE HELICAL LEAD SECTIONS AND EXTENSIONS SHALL BE SOLID STEEL, ROUNDED CORNER, SQUARE SHAFT CONFIGURATION, WITH ONE OR MORE HELICAL BEARING PLATES WELDED TO THE SHAFT.
6. ALL PIERS SHALL BE CORROSION PROTECTED BY HOT DIP GALVANIZATION PER ASTM A153.
7. INSTALLATION UNITS SHALL CONSIST OF A HYDRAULICALLY DRIVEN ROTARY TYPE TORQUE MOTOR WITH FORWARD AND REVERSE CAPABILITIES.
8. INSTALLATION UNITS SHALL BE CAPABLE OF DEVELOPING THE MINIMUM TORQUE AS REQUIRED.
9. INSTALLATION UNITS SHALL BE CAPABLE OF POSITIONING THE HELICAL PIER AT THE PROPER INSTALLATION ANGLE. THIS ANGLE MAY VARY BETWEEN VERTICAL AND 5 DEGREES DEPENDING UPON APPLICATION AND TYPE OF LOAD TRANSFER DEVICE SPECIFIED OR REQUIRED.
10. INSTALLATION TORQUE SHALL BE MONITORED THROUGHOUT THE INSTALLATION PROCESS.
11. HELICAL PIERS SHALL BE INSTALLED TO THE MINIMUM TORQUE VALUE REQUIRED TO PROVIDE ULTIMATE LOAD CAPACITIES OF PIERS.
12. THE APPROPRIATE STEEL NEW CONSTRUCTION LOAD TRANSFER DEVICE SHALL BE USED.
13. REFER TO PROJECT SPECIFICATIONS FOR ADDITIONAL INFORMATION.
14. CONTACT IAN ROMAIN, P.E. WITH ROCKY MOUNTAIN STEEL FOUNDATIONS, THE REGIONAL A.B. CHANCE DISTRIBUTOR, WITH QUESTIONS. PHONE: 406-756-PIER (7437)

NOTE: SPECIAL INSPECTION REQUIRED FOR HELICAL PIERS. SPECIAL INSPECTION REQUIRED FOR ALL CONCRETE OF 4500 PSI OR GREATER. ALL STRUCTURAL FOOTINGS SHALL BE 4500 PSI TO INCLUDE LIGHT POLE FOUNDATIONS.

SEE 1/S4.1 FOR REFERENCE TO HELICAL PIERS
SEE 2/S4.1 FOR REFERENCE TO INTERIOR DECK POST DECKING BASE
SEE 3/S4.1 FOR REFERENCE TO BACK STOP POST
SEE 7/S4.1 FOR REFERENCE TO GOAL POST FOUNDATION
SEE 8/S4.1 FOR REFERENCE TO FOUL POLE FOUNDATION

Sheet List Table

Sheet Number	Sheet Title
S0.1	GENERAL NOTES
S3.0	TENT ANCHOR PLAN
S4.1	STRUCTURAL DETAILS

COPYRIGHT BERNARDO WILLS ARCHITECTS,PC 2013

PROFESSIONAL ENGINEER REGISTERED 12589 STATE OF IDAHO BRIAN HANSON
FEB 17 2020

ECLIPSE ENGINEERING
421 W. RIVERSIDE AVE. SUITE 421
SPOKANE, WA 99201
ECLIPSE-ENGINEERING.COM
(509) 921-7731

153 SOUTH JEFFERSON SPOKANE WASHINGTON 99201 509.838.4511 FAX 509.838.4605 WWW.BERNARDOWILLS.COM

BWA BERNARDO | WILLS ARCHITECTS PC

BID SET

GENERAL NOTES

War Memorial Field Improvements - Phase I

801 Ontario Street
Sandpoint, Idaho 83864

Project No: 19-11-062
Drawn by: JMB
Date: FEB 17, 2020

S0.1

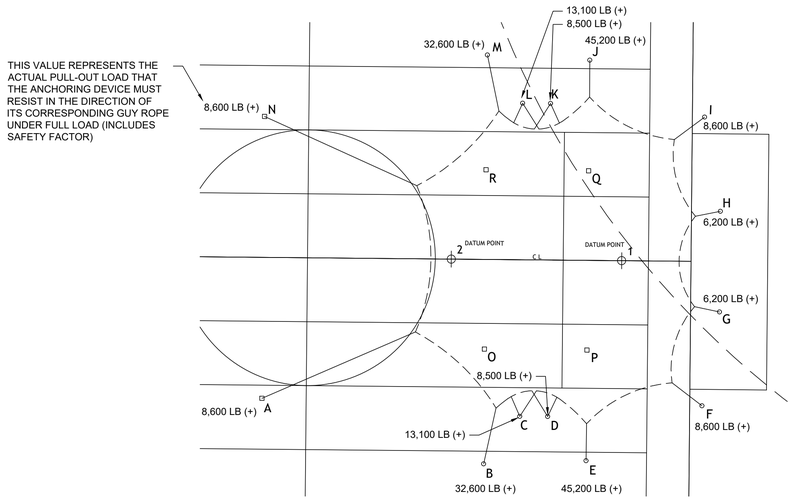

USING 145 PCF

ANCHOR LABEL	TENSION LOAD	ANCHOR TYPE	ANCHOR DETAIL FOR REFERENCE S4.1	VOLUME OF CONCRETE REQUIRED	CONCRETE CUBE SIZE REQUIRED	BLOCKS REQUIRED 6/S4.1
	LBS			CF	FT	
A	8600	Above-Grade	5 & 6	59.3	3.9	3
B	32600	Below-Grade	1	N/A	N/A	N/A
C	13100	Below-Grade	1	N/A	N/A	N/A
D	8500	Above-Grade	5 & 6	58.6	3.9	3
E	45200	Below-Grade	1	N/A	N/A	N/A
F	8600	Above-Grade	5 & 6	59.3	3.9	3
G	6200	Above-Grade	5 & 6	42.8	3.5	2
H	6200	Above-Grade	5 & 6	42.8	3.5	2
I	8600	Above-Grade	5 & 6	59.3	3.9	3
J	45200	Below-Grade	1	N/A	N/A	N/A
K	8500	Above-Grade	5 & 6	58.6	3.9	3
L	13100	Below-Grade	1	N/A	N/A	N/A
M	32600	Below-Grade	1	N/A	N/A	N/A
N	8600	Above-Grade	5 & 6	59.3	3.9	3
O	Compression	N/A	2	N/A	N/A	N/A
P	Compression	N/A	2	N/A	N/A	N/A
Q	Compression	N/A	2	N/A	N/A	N/A
R	Compression	N/A	2	N/A	N/A	N/A

SEE DETAILS 1,5, & 6 ON SHEET S4.1 FOR TYPICAL TENT ANCHOR DETAILS

SEE BALLAST SCHEDULE FOR REQUIRED WEIGHT AT EACH ANCHOR POINT

TENT ANCHOR PLAN

COPYRIGHT BERNARDO WILLS ARCHITECTS,PC 2013

PROFESSIONAL ENGINEER REGISTERED 12589 STATE OF IDAHO BRIAN HANSON

FEB 17 2020

ECLIPSE ENGINEERING
421 W. RIVERSIDE AVE. SUITE 421
SPOKANE, WA 99201
ECLIPSE-ENGINEERING.COM
(509) 921-7732

153 SOUTH JEFFERSON SPOKANE WASHINGTON 99201 509.838.4511 FAX 509.838.4605 WWW.BERNARDOWILLS.COM

BERNARDO | WILLS ARCHITECTS PC

BID SET
TENT ANCHOR PLAN

War Memorial Field
Improvements - Phase I

801 Ontario Street
Sandpoint, Idaho 83864

Project No: 19-11-062
Drawn by: JMB
Date: FEB 17, 2020

S3.0

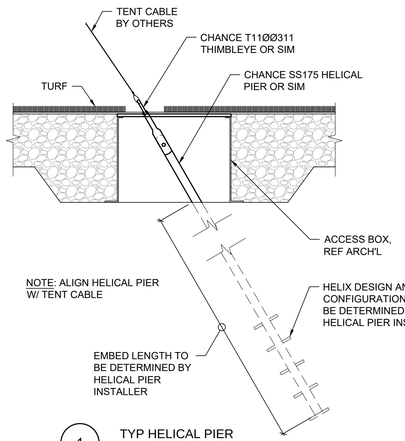

1 TYP HELICAL PIER
SCALE: 3/4" = 1'-0"

NOTE: REF ARCH PLANS FOR LOCATIONS OF HELICAL PIERS

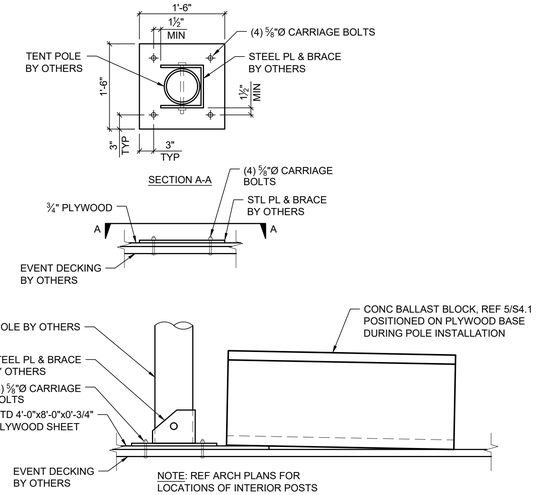

NOTE: REF ARCH PLANS FOR LOCATIONS OF INTERIOR POSTS

2 INTERIOR TENT POST DECKING BASE (BY OTHERS)
SCALE: 3/4" = 1'-0"

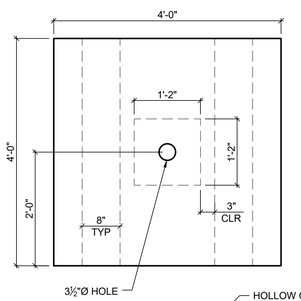

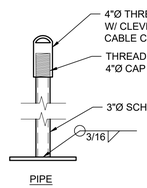

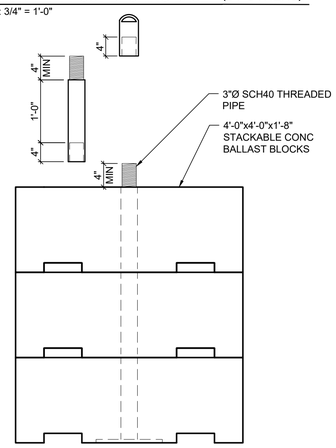

STACKED BLOCKS	COMBINED WEIGHT
1	3,400 LBS
2	6,800 LBS
3	10,200 LBS

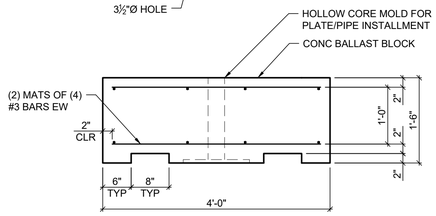

5 TYP CONCRETE BALLAST BLOCK
SCALE: 3/4" = 1'-0"

6 TYP CONCRETE BALLAST BLOCK (STACKED)
SCALE: 3/4" = 1'-0"

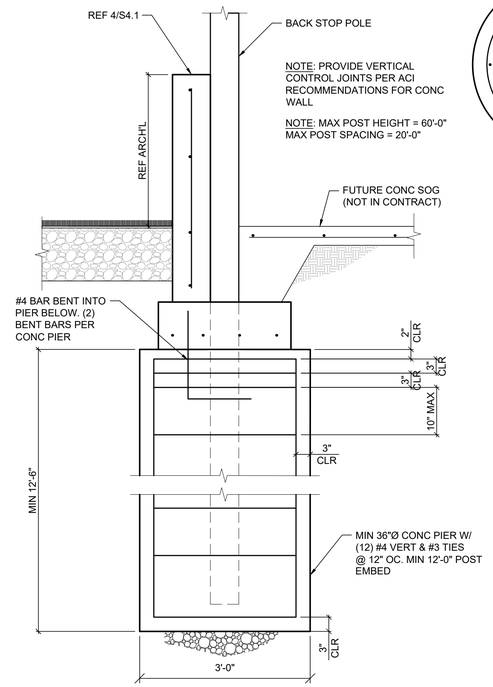

3 TYP BACK STOP POST DETAIL
SCALE: 3/4" = 1'-0"

NOTE: REF ARCH PLANS FOR LOCATIONS OF BACK STOP POSTS

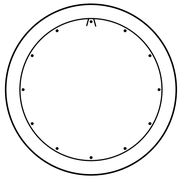

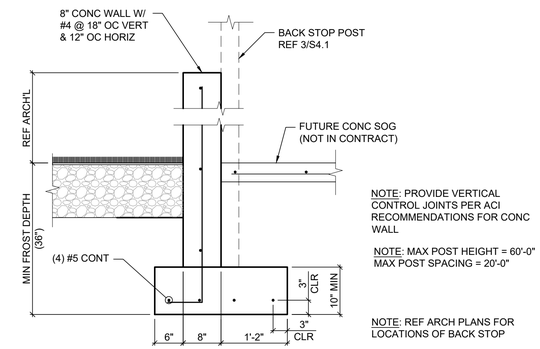

NOTE: REF ARCH PLANS FOR LOCATIONS OF BACK STOP

4 TYP FREE-STANDING BACK STOP WALL DETAIL
SCALE: 3/4" = 1'-0"

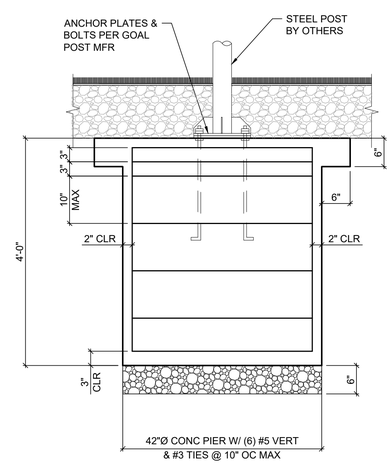

7 TYP GOAL POST FOUNDATION
SCALE: 3/4" = 1'-0"

NOTE: REF ARCH PLANS FOR LOCATIONS OF GOAL POSTS

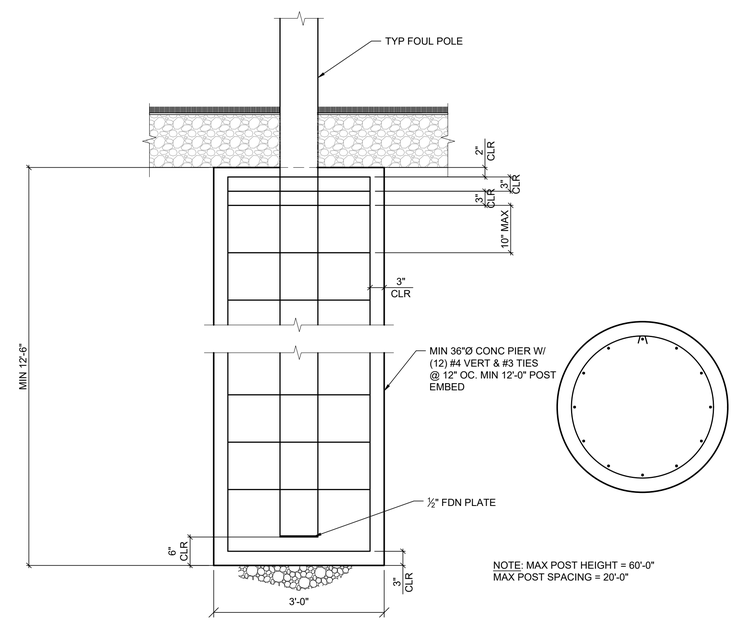

8 TYP FOUL POLE FOUNDATION
SCALE: 3/4" = 1'-0"

NOTE: REF ARCH PLANS FOR LOCATIONS OF FOUL POLES

COPYRIGHT BERNARDO WILLS ARCHITECTS,PC 2013

PROFESSIONAL ENGINEER REGISTERED 12589 STATE OF IDAHO BRIAN HANSON
FEB 17 2020

ECLIPSE ENGINEERING
421 W. RIVERSIDE AVE. SUITE 421
SPOKANE, WA 99201
ECLIPSE-ENGINEERING.COM
(509) 921-7733

153 SOUTH JEFFERSON SPOKANE WASHINGTON 99201 509.838.4511 FAX 509.838.4605 WWW.BERNARDOWILLS.COM

BERNARDO | WILLS ARCHITECTS PC
BWA

BID SET
STRUCTURAL DETAILS

War Memorial Field Improvements - Phase I
801 Ontario Street
Sandpoint, Idaho 83864

Project No: 19-11-062
Drawn by: JMB
Date: FEB 17, 2020

S4.1